PENTAIR
EVERPURE

ENDURANCE® SC HIGH FLOW QUAD 1.1 SYSTEM

System Part Number: EV9437-42

FEATURES • BENEFITS

- High capacity allows system to keep up with high water demands and allows for 12-month estimated cartridge change-outs
- Ultrafiltration hollow fiber membranes reduce particle contaminants, to help ensure reliable and efficient operation
- Proprietary Fibredyne™ II media provides chlorine taste & odor reduction and micro-filters dirt and particles as small as 0.2* micron
- Utilizes Everpure 2SR-BW feeder system to help minimize scale reduction
- Filtration media inhibits growth of bacteria within the filter to guard against media fouling and optimize performance
- NSF/ANSI Standard 53 certified to reduce cysts such as Cryptosporidium and Giardia by mechanical means
- NSF/ANSI Standard 401 certified for Microplastics Reduction

APPLICATIONS

- Multiple equipment and combination sysems
- High volume installations
- Locations with high submicron particulate content in water source

INSTALLATION TIPS

- Choose a mounting location capable of safely supporting the full weight of the system when in operation.
- Use 3/4" water line.
- Fountain equipment connections are made to the outlet part of the system before the Everpure 2SR-BW feeder system.
- Coffee brewer and ice machine connections are made after the Everpure 2SR-BW feeder system; a tee is required.
- Install vertically and allow 5" (12.7 cm) clearance below the cartridge for easy removal and replacement.
- Frame is designed to mount on 16" centers (wall studs).

*Validated by ISO 17025 accredited lab for 99.999% reduction of Pseudomonas diminuta following the ASTM F838-05 protocol for the validation of 0.2 µm sterilizing grade filters.

EPA Est. No. 002623-IL-002

ENDURANCE® SC HIGH FLOW QUAD 1.1 SYSTEM

EV9437-42

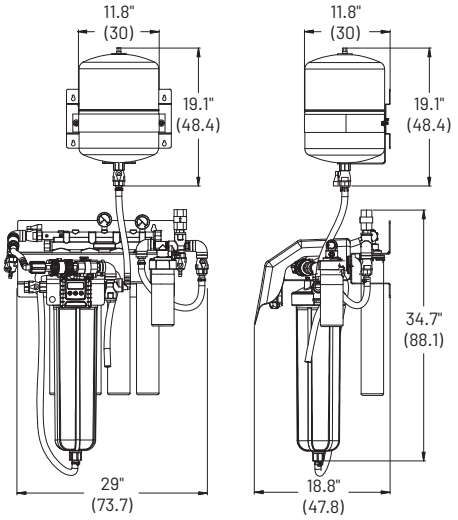

Specifications

Overall Dimensions
34.7" H x 29" W x 18.8" D
(88.1 cm x 73.7 cm x 47.8 cm)

Tank Dimensions
19.1" H x 11.8" W x 11.8" D
(48.4 cm 30 cm x 30 cm)

Connections
Inlet: 3/4" FNPT (19 mm)
Outlet: 3/4" FNPT (19 mm)
Backwash: 3/4" (19 mm) I.D. Tube
2SR-BW cartridge: 1/2" (13.6 mm) Barb
Flush ports: 3/8" (9.5 mm) Barb

Operating Pressure
50 - 100 psi (3.5 – 6.9 bar), non-shock

Water Temperature
35 - 100°F (2 - 38°C)

Operating Weight
116.6 lbs (52.9 kgs)

Shipping Weight
70 lbs (31.8 kgs)

Electrical Connection
100 – 240 VAC / 50 – 60 Hz
1.5 Amp (international plugs included)

Service Flow Rate
15 gpm (56.8 Lpm)

Rated Capacity
200,000 gallons (757,082 L) or one year

REPLACEMENT PARTS

Description	Part No
Endurance SC Quad 1.1 Cartridge Kit	EV9628-72
Endurance SC UF Membrane Pretreatment Filter	EV9628-91

For Pentair Everpure Product Warranties visit:
http://pentair.com/assets/foodservice-warranty

The contaminants or other substances removed or reduced by this drinking water system are not necessarily in your water. Do not use with water that is microbiologically unsafe or of unknown quality without adequate disinfection before or after the system.

Systems certified for cyst reduction may be used with disinfected water that may contain filterable cysts.

Since the conditions under which our products may be used are beyond our control, we cannot accept any liability with respect to the improper installation, application and/or use of our products.

System Tested and Certified by NSF International against NSF/ANSI Standards 42, 53 and 401 for the reduction of:

STANDARD NO. 42 — AESTHETIC EFFECTS
- Bacteriostatic Effects
- Chemical Reduction
  - Taste and Odor
  - Chlorine
- Mechanical Filtration
  - Nominal Particulate Class I

STANDARD NO. 53 — HEALTH EFFECTS
- Mechanical Filtration
  - Turbidity
  - Cyst

STANDARD NO. 401 — EMERGING COMPOUNDS/INCIDENTAL CONTAMINANTS
- Mechanical Filtration
  - Microplastics

AS/NZS 3497
WM 040224
Global-Mark.com.au

PENTAIR

1040 Muirfield Drive | Hanover Park, IL 60133 | 800.942.1153 (US Only) 630.307.3000 Main | cseverpure@pentair.com | foodservice.pentair.com

All indicated Pentair trademarks and logos are property of Pentair. Third party registered and unregistered trademarks and logos are the property of their respective owners.

©2023 Pentair. All rights reserved.