EVERPURE
FROM PENTAIR WATER SOLUTIONS

QC7I SINGLE - 7CLM+-S SYSTEM

Part Number: EV974220

SYSTEM DESCRIPTION

Elevate your water quality and help protect your foodservice equipment with the **Everpure QC7I Single 7CLM+-S** water filtration system. The system reduces chloramines, chlorine, and tastes & odors and limescale* while filtering particulates down to 5 microns to help support equipment performance, improve equipment lifespan, and enhance beverage quality. With a flow rate of 1.67 gpm and a capacity of 8,000 gallons, the system helps provide dependable filtration for combi oven and coffee equipment.

FEATURES • BENEFITS

- High-performance catalytic carbon block technology is engineered to reduce chloramines, chlorine, tastes & odors and filters sediment as small as 5 microns
- Patent-pending phosphate release technology engineered for consistent scale* protection
- Manifold features water shut off, flushing valve, and outlet pressure gauge
- Easy, quick-change filter replacement
- NSF/ANSI Standard 42 certified for the reduction of Chloramines, Chlorine, Taste & Odor, and Particulate Class III

APPLICATIONS

- Coffee
- Combi oven

INSTALLATION TIPS

- Choose a mounting location suitable to support the weight of the system while operating.
- Install vertically and allow 2½" (6.35 cm) clearance below the cartridge for easy removal and replacement.
- Feed water temperature must not exceed 100°F (38°C).
- Do not install where the system could be exposed to freezing temperatures.
- Feed water supply pressure must not exceed 125 psi (non-shock). When pressure exceeds 85 psi, a pressure reducing valve is recommended.
- Flush cartridges by running water through the system for five (5) minutes.
- For more details, see the installation, operation, and maintenance guide included with the system.

* As tested by Pentair.

QC7I SINGLE - 7CLM+-S SYSTEM

EV974220

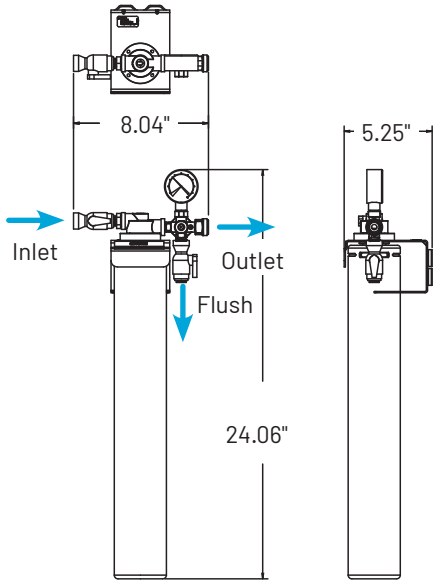

SPECIFICATIONS

System	Performance
Overall Dimensions 24.06" L x 8.04" W x 5.25" D (61.11 x 20.43 x 13.33 cm)	**Service Flow Rate** 1.67 gpm (6.32 Lpm)
Connections Inlet: 3/8" FNPT Outlet: 3/8" FNPT	**Rated Capacity Chloramines** 8,000 gallons (30,283.29 L) 15,000 gallons (56,781.17 L)*
Operating Pressure 10 – 125 psi (0.7 – 8.6 bar)	**Rated Capacity Chlorine** 8,000 gallons (30,283.29 L) 15,000 gallons (56,781.17 L)*
Water Temperature 35 – 100°F (2 – 38°C)	**Chloramines Reduction** Yes
Operating Weight 23.75 lbs (10.77 kgs)	**Chlorine Reduction** Yes
Shipping Weight 5.42 lbs (2.46 kgs)	**Tastes & Odors Reduction** Yes
Electrical Connection None required	**Particulate Reduction** Yes
	Limescale Reduction Yes†

*As tested by Pentair at a flow rate of 1 gpm (3.78 Lpm).
† As tested by Pentair.

For Pentair Everpure Product Warranties visit:
http://pentair.com/assets/foodservice-warranty.
To receive a free copy email or call your Pentair representative using the information provided below.

Replace all filter cartridges every six (6) months as part of a regular scheduled program and no less than once per year. In multiple-cartridge systems, all primary quick-change cartridges must be replaced simultaneously.

The substances reduced by this drinking water device are not necessarily in your water.

Do not use with water that is microbiologically unsafe or of unknown quality without adequate disinfection before or after the system.

REPLACEMENT CARTRIDGE

Model	Qty	Description	Part No
7CLM+-S	1	Primary filter	EV973150 (1pk)

System Tested and Certified by NSF International against ASSE / ANSI 1087 and NSF/ANSI Standard 42 for the reduction of:

STANDARD NO. 42 — AESTHETIC EFFECTS

Chemical Reduction
- Taste & Odor
- Chloramines
- Chlorine

Mechanical Filtration
- Nominal Particulate Class III

PENTAIR
WATER SOLUTIONS

1040 Muirfield Drive | Hanover Park, IL 60133 | 800.942.1153 (US Only) 630.307.3000 Main | cseverpure@pentair.com | foodservice.pentair.com

All indicated Pentair trademarks and logos are property of Pentair. Third party registered and unregistered trademarks and logos are the property of their respective owners.

©2026 Pentair. All rights reserved.