Compool

Cp3800 POOL-SPA CONTROL SYSTEM

Installation & Operating Instructions

11/07/97

941-1064

Table of Contents

Safety Notice . . . 3
- Important Safety Instructions . . . 3

Introduction . . . 4
- Package Contents . . . 4
- Plumbing Requirements . . . 6
- Equipment Location . . . 7

Installation . . . 8
- High Voltage Wiring . . . 8
  - Power Center with built in Sub-panel . . . 8
  - Power Center without built in Sub-panel . . . 8
  - System Power . . . 9
  - Equipment Power . . . 10
  - Adding Relays . . . 10
  - Underwater Lights . . . 11
- Low Voltage Wiring . . . 12
  - Power Center Circuit Board . . . 12
  - Low Voltage Cables . . . 13
  - Valve Actuators . . . 13
  - Gas Heater Connections . . . 14
  - Water Temperature Sensor . . . 14
  - Freeze Temperature Sensor . . . 15
  - Control Panel . . . 16
  - Modular Crimping Tool . . . 17
- System Options . . . 18
  - Spa-side Remote . . . 18
  - Multiple Control Panels . . . 19
  - Valve Module . . . 19
  - Heat Pump or Electric Heater . . . 20
  - Solar Heating . . . 20
  - Solar Booster Pump Control . . . 20
  - Two Speed Filter Pump . . . 21
  - Telephone Module . . . 21
  - Dimmer Relay . . . 21
  - Backwash Control . . . 22
  - Floor Cleaner Valve . . . 22
- Configuration Switches . . . 23
  - FREEZE . . . 23
  - I/L - Interlock . . . 23
  - SYST - System . . . 23
  - SPEC FUNCT - Special Functions . . . 23
  - HI SPD - High Speed . . . 24
  - PHONE CONTROLS . . . 24

System Start-up 24

Operating Instructions. 25
Control Panel 25
Equipment Keys 25
Equipment Status Icons 25
Equipment Status Lamps 26
Heater Protection 26
Cleaner Protection. 26
Canceling Heater and Cleaner Protection 26
Temperature Control. 27
Fahrenheit/Celsius key 28
Programming 28
Programming 29
Programming additional Run Times. 29
Programming a Time-out 29
Programming a Once-only 30
Canceling Programs 30
Setting the Time of Day 30
Remote Control at Spa key 30
Calibration 31
Power Center. 33
Equipment keys. 33
3 - Hour Filter Override 34
Sensor Status. 34
Spa-side Remote 35
Spa-side Heat Boost 35
System Options 36
Telephone Module 36
2-speed Filter Pump Control. 36
Spa Waterfall Control 36
Freeze Protection 36
Winterizing the System. 37

Problem Solving 38

Warranty 40

Index 41

Safety Notice

Important Safety Instructions

When installing and using this electrical equipment, basic safety precautions should always be followed, including the following:

- Read and follow all instructions.
- To reduce the risk of injury, do not permit children to use this product unless they are closely supervised at all times.
- Water in excess of 100 degrees Fahrenheit may be hazardous to your health.
- A terminal bar (marked for equipment ground only) is located inside the high voltage compartment of the Power Center. To reduce the risk of electric shock, this terminal must be connected to the grounding means provided in the electrical supply panel with a continuous copper wire equivalent in size to the circuit conductors supplying this equipment.
- Save these instructions.

Introduction

Package Contents

The CP3800/T system includes the following components.

CP-3800	Control Panel (w/ cable)	(1 qty.).
LX-3800	Power Center	(1 qty.).
CVA-24T	Valve Actuator	(2 qty.).
PTV-2T	3-Port Valve	(2 qty.).
SNS-KIT2	Sensor Kit	(1 qty.).

The CP3800/TL system includes the following components.

CP-3800	Control Panel (w/ cable)	(1 qty.).
LX-3800L	Power Center	(1 qty.).
CVA-24T	Valve Actuator	(2 qty.).
PTV-2T	3-Port Valve	(2 qty.).
SNS-KIT2	Sensor Kit	(1 qty.).

Plumbing Requirements

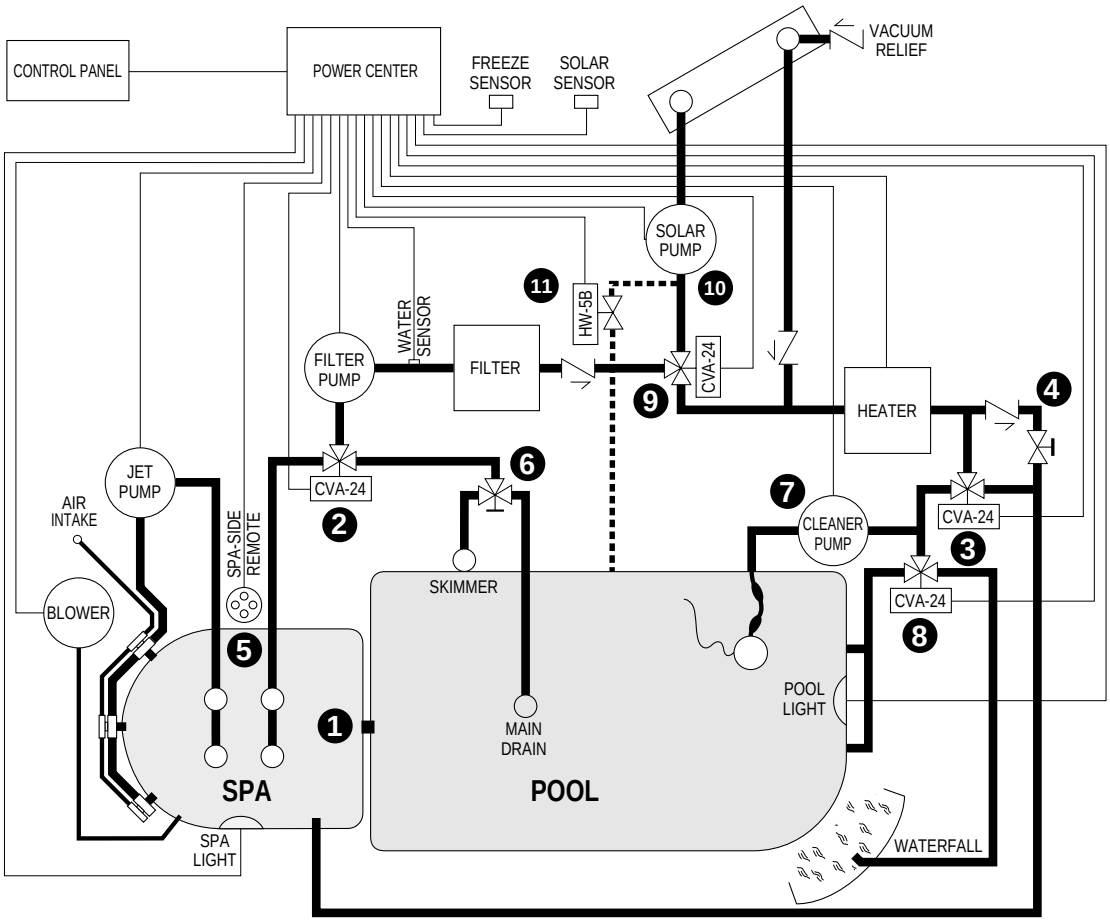

Plumb system in accordance with recommended hydraulic schematic.

1. Spa should be at or above the level of the pool. If spa is attached to pool, provide a dam between the two bodies of water, this allows the spa to overflow into the pool. If spa is not attached to pool, an overflow, sufficient in size to carry full pump-flow, must be installed between the spa and pool.
2. Plumb 3-port valve on the suction-side of the filter pump, so that center port of valve is connected to the filter pump. Connect spa suction to one port, and pool suction to the other port.
3. Plumb 3-port valve on the output-side of the heater, so that center port of valve is connected to the heater. Connect spa return to one port, and pool return to the other port.
4. Plumb 3/4” spa makeup line (incorporating a 3/4” ball valve and a 3/4” check valve). During pool circulation, some of the pool water needs to enter the spa to keep it chemically balanced and full of water. The ball valve adjusts the amount of bypass.
5. If a Spa-side Remote is to be used, install a 3” to 6” length of 1.5” Sch. 40 pvc pipe in the spa wall so that the Spa-side Remote will not be submerged. Positioning the top of the pipe 1/2” below the coping. The pipe should extend beyond the finished surface and will be cut back after tile work is completed. Connect a 1/2” conduit and run back to Power Center. Use sweep elbows for turns.

6. Systems with separate main drain and skimmer lines can use a 3-port valve to balance the flow.
7. Plumb cleaner pump after the return valve to the pool return line.
8. A Valve Actuator can be used to direct pool return water to a waterfall. This eliminates the need for an additional pump.
9. Plumb solar feed and return lines between the filter and heater. Install 3-port solar valve at the feed line. Use Compool solar valve (model SOL-2T), to allow automatic draining of panels.
10. A solar booster pump should be used when distance to panels exceeds 200’, or panels are elevated higher than 25’.
11. Glazed solar panels require a drain valve (model HW-5B) to allow draining of panels. This prevents damage from overheating water. Install drain valve at solar feed line and connect to the pool fill line.

Equipment Location

With the exception of the Spa-side Remote, all equipment must be located at least 10’ from the water’s edge. Locate equipment in the following locations.

LX-3800	Power Center - at the equipment site.
CP-3800	Control Panel - inside the house or other weather-protected area.
CVA-24T	Valve Actuators - at valves to be motorized.
SNS-KIT2	Water Temperature Sensor - at the filter pump. Freeze Temperature Sensor - at equipment pad.

Installation

High Voltage Wiring

Power Center with built in Sub-panel

At the equipment pad, mount the Power Center within 15’ of all the equipment. Provide power from the Main-panel (located at the house) to Power Center.

Power Center without built in Sub-panel

At the equipment pad, mount a 100 amp electrical circuit breaker panel (Sub-panel) within 15’ of all the equipment. Provide power from Main-panel (located at the house) to the Sub-panel. Mount the Power Center next to the Sub-panel.

System Power

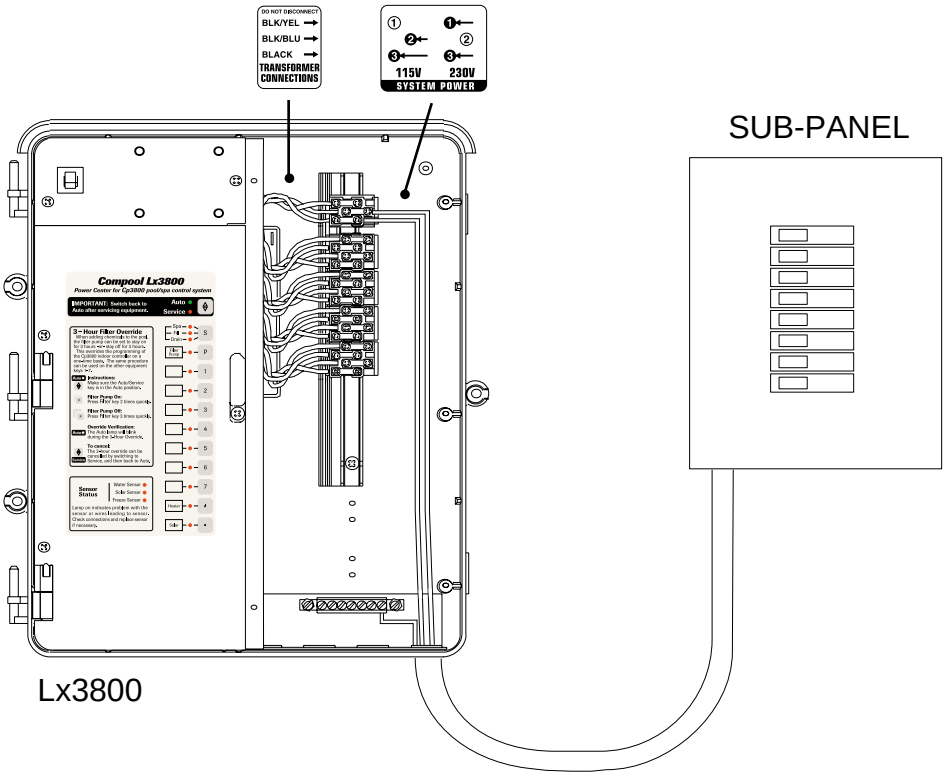

System Power provides power to the transformer.

- **To wire System Power**

  1. At the Sub-panel, install a circuit breaker for System Power. The system draws less than 1 amp. Do not use a GFCI circuit breaker.
  2. Run appropriate wires from the circuit breaker to the System Power terminal block.
  3. For a 115 volt connection, connect to terminals 2 and 3.
  4. For a 230 volt connection, connect to terminals 1 and 3.

Caution Incorrect wiring will cause permanent damage to the transformer.

Equipment Power

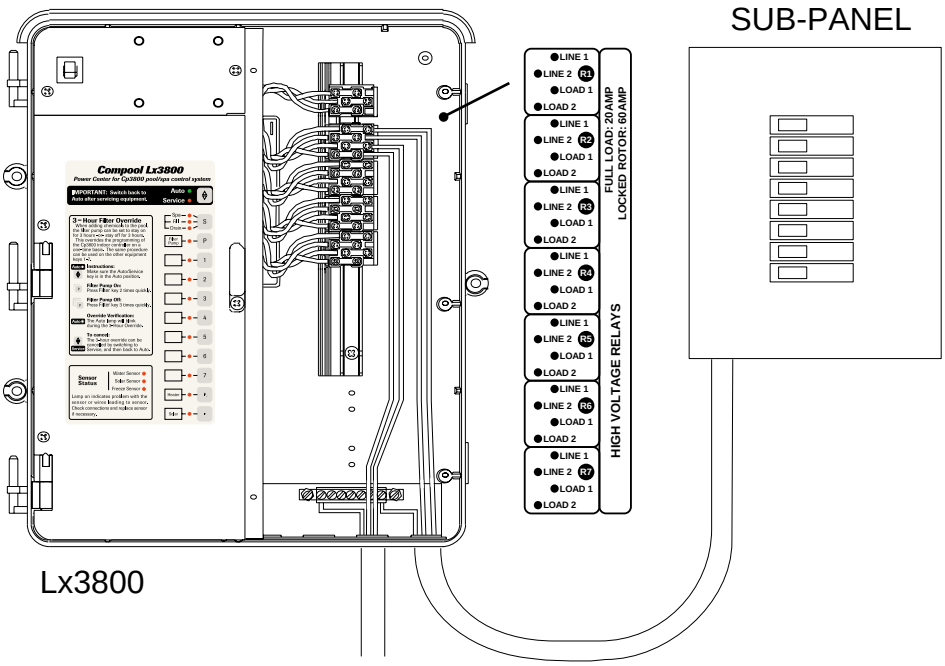

The diagram above shows how the filter pump is wired. Additional pumps should be wired the same way.

- **To wire high voltage equipment**

  1. At the Sub-panel, install circuit breaker. Run wires from circuit breaker to relay terminal block LINE 1 and LINE 2.
  2. Connect equipment to the relay terminal block LOAD 1 and LOAD 2.

Note If pump is greater than 3 H.P., install an external contactor. Use relay to switch coil of external contactor.

Adding Relays

The Power Center comes standard with 4 relays. It is possible to add additional relays (model RLY-LX). The LX-3800 Power Center has room for 7 relays, and the LX-3800L Power Center has room for 8 relays.

Underwater Lights

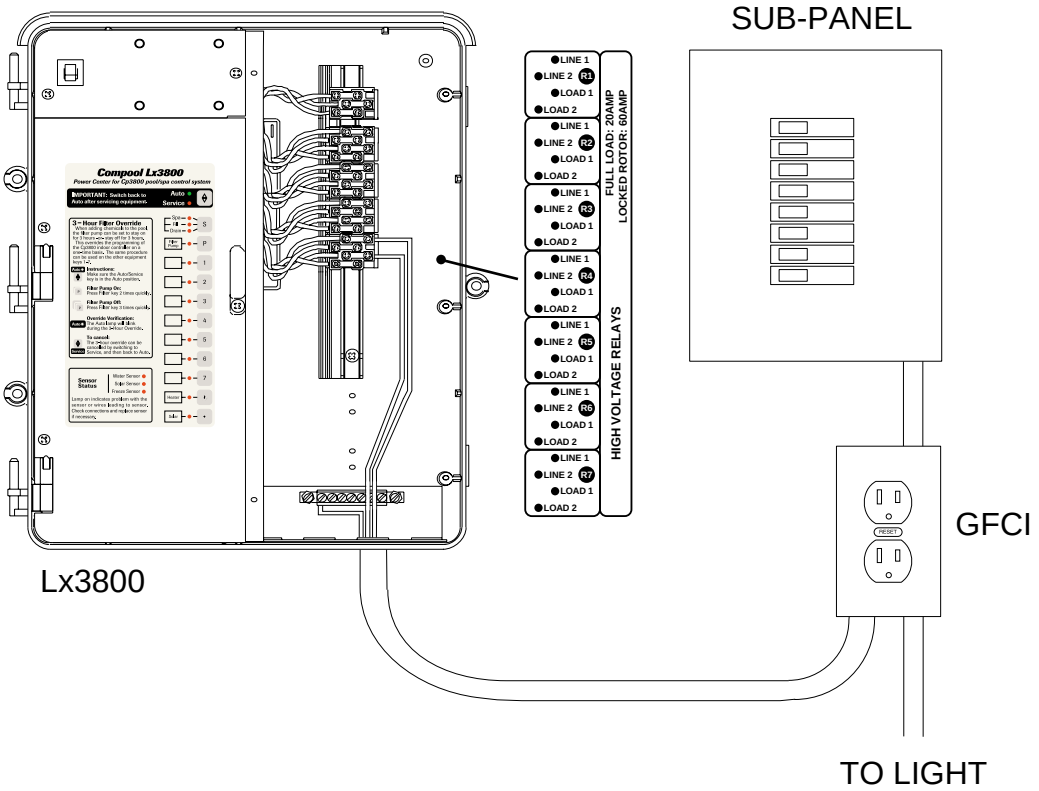

High voltage pool/spa lights require GFCI protection. To meet electrical code requirements, the pool/spa light must be connected directly to the GFCI. Do not use a GFCI circuit breaker.

- **To wire high voltage pool/spa light**

1. Install a GFCI receptacle next to the Sub-panel.
2. Connect neutral and hot wire from circuit breaker to the LINE SIDE of the GFCI receptacle.
3. Connect white wire from the light to the LOAD SIDE of the GFCI receptacle.
4. Connect the other wire from the light to LOAD 1 of the relay terminal block.
5. Connect a wire from LINE 1 of the relay terminal block to the LOAD SIDE of the GFCI receptacle.

Note The example above assumes the pool or spa light is 500 watts or less. If the pool has two 500 watt lights, the second light needs to be wired to LOAD 2 of the relay terminal block. Install a jumper wire between LINE 1 and LINE 2 of the relay terminal block.

Low Voltage Wiring

Power Center Circuit Board

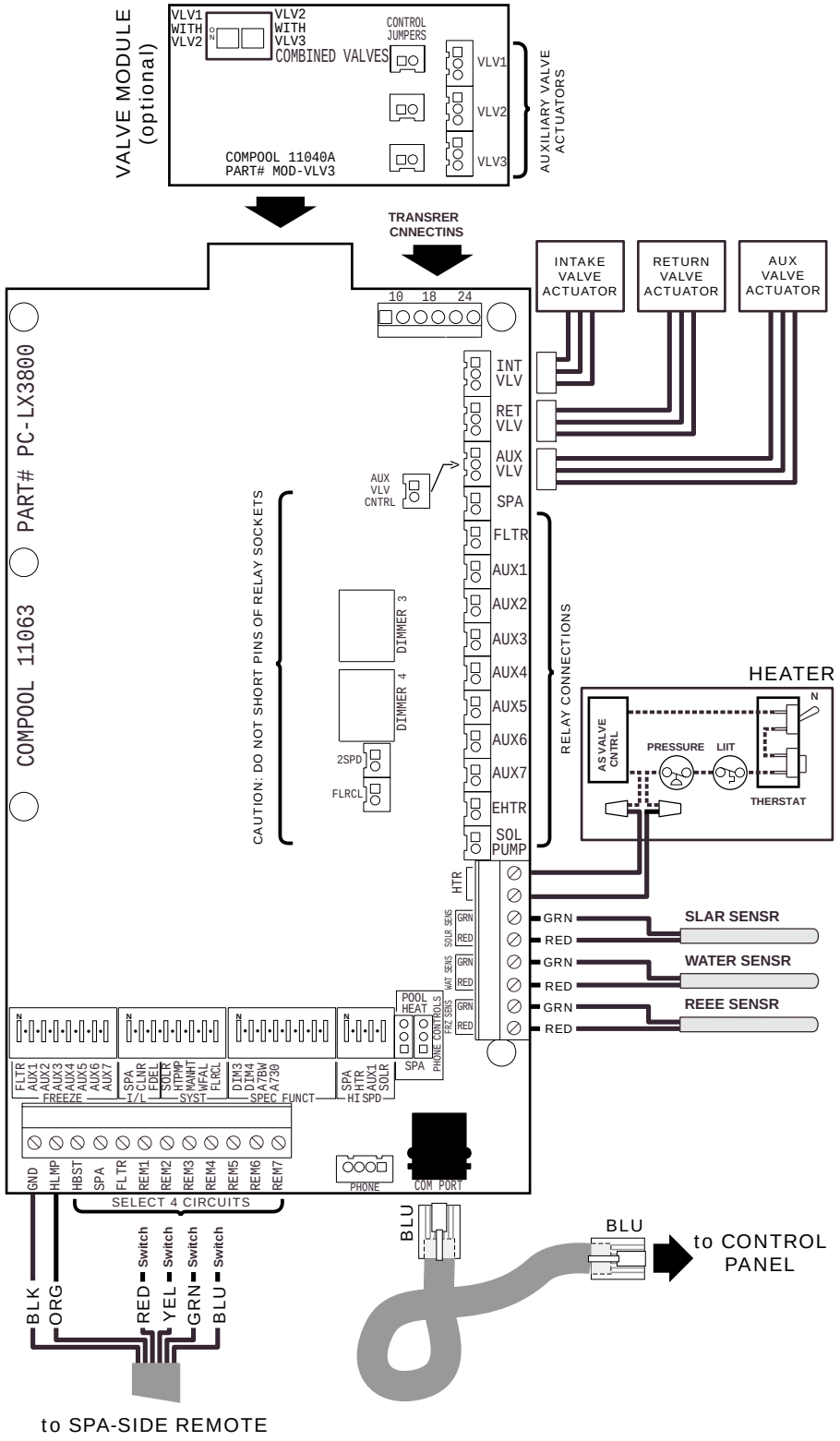

944-1063

Low Voltage Cables

Control Panel

6-conductor cable runs between the Control Panel and the Power Center.

Heater Connection

2-conductor cable runs between the heater and the Power Center.

Water Temperature Sensor

2-conductor cable runs between the Water Temperature Sensor and the Power Center.

Freeze Temperature Sensor

2-conductor runs between the Freeze Temperature Sensor and the Power Center.

Valve Actuators

3-conductor cable runs between Valve Actuator and the Power Center.

Caution Do not install low voltage and high voltage wires in the same conduit. Use conduit when cable goes underground.

Valve Actuators

Valve Actuators come with 15 feet of cable. If this distance is not long enough, it is possible to splice in additional wire to lengthen cable. Use 3-conductor wire (model 3COND-CVA).

- **To install Valve Actuators**

1. Remove knob, handle and four cover screws from the valves to be motorized.
2. Use mounting screws provided to mount Valve Actuators.
3. Run Valve Actuators cables to the Power Center. Bundle up extra cable under Power Center. Do not store extra cable in the low voltage compartment.
4. At the top right corner of the Power Center circuit board, plug Valve Actuator cable into the appropriate valve socket.
   - Plug intake Valve Actuator cable into INT VLV socket.
   - Plug return Valve Actuator cable into RET VLV socket.
   - Plug optional third Valve Actuator cable into AUX VLV socket.
5. The AUX VLV socket is most often used to control a solar or cleaner Valve Actuator. To select which circuit will control the AUX VLV socket, connect jumper wire between

AUX VLV CNTRL socket and relay socket of choice. The system ships with the jumper connected between AUX VLV CNTRL and SOL PUMP.

Note To control more than three Valve Actuators, see Valve Module for details.

Gas Heater Connections

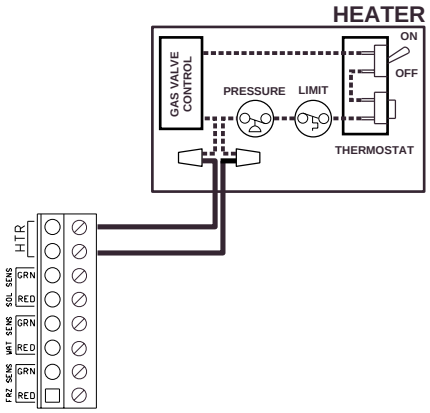

The diagram above shows how to wire a gas heater.

- **To wire the gas heater**

1. Run a 2-conductor cable from the heater to the Power Center.
2. At the heater, connect 2-conductor cable as instructed in heater installation manual.
3. At the Power Center circuit board, connect 2-conductor cable to the HTR terminals.
4. If heater has electronic ignition, provide high voltage power from the Sub-panel.

Water Temperature Sensor

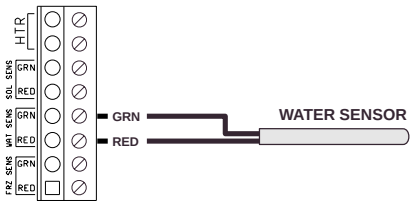

The Water Temperature Sensor measures pool and spa temperature.

- **To wire the Water Temperature Sensor**

1. Select a convenient location to mount the sensor between the filter pump and filter.
2. Drill a 5/16 inch diameter hole in the pipe and insert the sensor.
3. Position the hose clamp over the sensor, and gently tighten around pipe.

   Caution Do not overtighten clamp.

4. Run a 2-conductor cable between the sensor and the Power Center.

5. At the sensor, use crimp connectors (included) to provide waterproof connections. Before making connections, cut off stripped ends of cable. Insert the 2 wires to be connected into the connector and squeeze the connector with a pair of pliers. Two extra connectors are included.

   Caution Do not strip wires.

6. At the Power Center circuit board, connect sensor wires to WAT SENS screw terminals. Pay attention to color-coding of wires.

Note Calibration of the Water Temperature Sensor is required. See Calibration for details.

Freeze Temperature Sensor

The Freeze Temperature Sensor measures air temperature at the equipment pad.

- **To wire the Freeze Temperature Sensor**

1. Install the sensor next to the Power Center.
2. Run a 2-conductor cable from the sensor to the Power Center.
3. At the sensor, use crimp connectors (included) to provide waterproof connections. Before making connections, cut off stripped ends of cable. Insert the 2 wires to be connected into the connector and squeeze the connector with pliers. Two extra connectors are included.

   Caution Do not strip wires.

4. At the Power Center circuit board, connect sensor wires to FRZ SENS screw terminals. Pay attention to color-coding of wires.
5. Adjust the Freeze program switch at the bottom of the Power Center circuit board to determine which pumps should turn on during freeze protection.

Note Calibration of Freeze Temperature Sensor is required. See Calibration for details.

Control Panel

- **To install the Control Panel**

  1. Select a location inside the house or other weather-protected area to mount the Control Panel. The Control Panel should be installed at or below eye level.
  2. Remove backplate from Control Panel. Position backplate and mark the three mounting points.
  3. Drill 3/16” diameter holes at the three points. Insert mounting anchors (included) into the three holes.
  4. Pull cable through large hole in backplate, use the three 1.25” screws to mount backplate to wall. Use crimping tool to connect modular connector to cable. See Modular Crimping Tool for details.
  5. Plug modular connector into either COM PORT socket on the back of the Control Panel.
  6. Use the four 1/2” screws (included) to mount the Control Panel to the backplate.
  7. At the Power Center, use the crimping tool to connect the modular connector to the cable. Plug modular connector into the COM PORT socket.

Modular Crimping Tool

The Crimping Tool is required to attach modular connectors to the Hookup Cable. The tool may be purchased from a pool supply store (model TOOL-6). If purchasing from an electrical supply store, verify it is designed to crimp 6-position connectors.

- **To install the modular connectors**

1. Use stripper to remove cable jacket.
2. Insert modular connector into crimper slot.
3. Insert cable with blue wire closest to the tool handle.
4. Squeeze handle firmly to set secure connector.

Note It is required that position of blue wire is the same at both ends of the cable.

System Options

Spa-side Remote

The Spa-side Remote is typically installed in the tile-line of the spa. See Plumbing Requirements for details.

- **To install the Spa-side Remote**

1. When spa construction is completed, cut back the 1.5” dia. pvc pipe flush to the tile.
2. Thread mounting adapter onto Spa-side Remote.
3. Pull Spa-side Remote cable through conduit to Power Center.
4. Glue mounting adapter into 1.5” pvc pipe with pvc cement so that the red button will be on top.
5. At the Power Center, connect Spa-side Remote wires to appropriate screw terminals located at bottom of the of the circuit board.

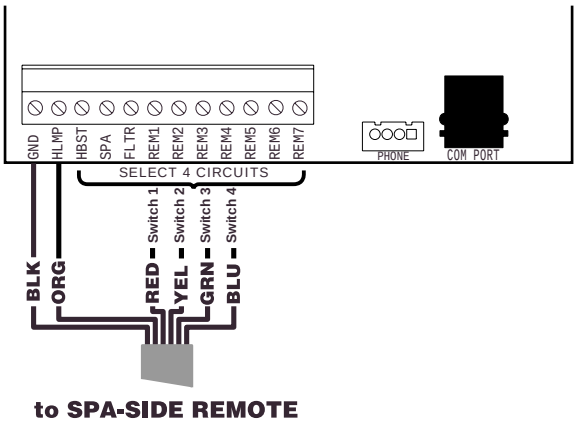

6. Connect black wire to GND screw terminal.
7. Connect orange wire to HLMP screw terminal.
8. Determine which circuits you wish to control from within the spa, and connect the red, yellow, green and blue wires to the appropriate screw terminals.

HBST Activates Heat-Boost function.
FLTR Activates filter pump.

SPA	Activates Spa mode.
REM1	Activates AUX1 equipment.
REM2	Activates AUX2 equipment.
REM3	Activates AUX3 equipment
REM4	Activates AUX4 equipment.
REM5	Activates AUX5 equipment.
REM6	Activates AUX6 equipment.
REM7	Activates AUX7 equipment.

9. Use labels provided to identify each button on the Spa-side Remote.

Note Install a second Spa-side Remote to control additional functions.

Multiple Control Panels

It is possible to add additional Control Panels.

- **To install an additional Control Panel**

1. Mount Control Panel as described earlier.
2. Run the communication cable between each Control Panel. Two connectors are provided on the back of each Control Panel to allow “daisy chaining”.

Note If two Control Panels are being wired where each communication cable is run back to the Power Center, a coupler (model 6COND-DUAL) is required.

Valve Module

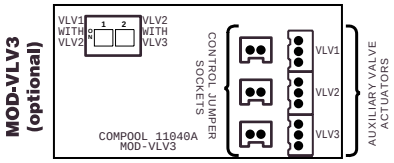

The Valve Module (model MOD-VLV3) allows the system to control three additional Valve Actuators.

- **To install Valve Module**

1. Attach Valve Module to the top of the Power Center circuit board.
2. Run Valve Actuator cable(s) to the Valve Module.
3. Plug each Valve Actuator cable into the 3-pin sockets (VLV1, VLV2, or VLV3).
4. Locate the 2-conductor jumper wires included with Valve Module kit. Each individually controlled Valve Actuator will require a separate jumper wire.
5. Connect one end of the jumper wire into CONTROL JUMPERS socket on the Valve Module. Connect the other end of the jumper wire into the Power Center circuit board at the appropriate relay socket (SPA, FLTR, AUX1, AUX2, AUX3, AUX4, AUX5, AUX6, AUX7, EHTR, SOL PUMP, 2SPD, FLRCL).
6. The D.I.P. switch, located at the upper left-side of Valve Module, allows combining the operation of Valve Actuators.

Heat Pump or Electric Heater

These heaters require a relay kit (model RLY-LX) be added. The HTR connection used for gas heaters cannot used.

- **To wire a heat pump or electric heater.**

1. At the Power Center, install the relay into the high voltage compartment. Plug control wire into the EHTR relay socket on the Power Center circuit board.
2. Run a 2-conductor cable the from heater to the Power Center.
3. At the heater, cut thermostat wire and connect to 2-conductor cable.
4. At the Power Center, connect 2-conductor cable to LINE 1 and LOAD 1 of the relay terminal block.

Solar Heating

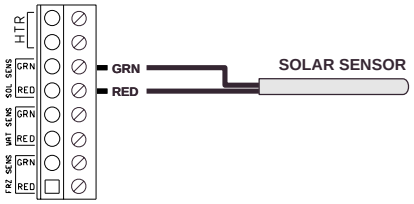

Solar systems require the following additional equipment, a Solar Temperature Sensor (model TS-5L), a Valve Actuator (model CVA-24T), and a solar valve (model SOL-2T).

- **To install solar equipment**

1. Discard clamp included with sensor kit. For unglazed panels, fasten sensor next to solar panels. For glazed panels, suspend sensor between collector and glazing.
2. Run a 2-conductor cable from the sensor to the Power Center.
3. At the sensor, use crimp connectors (included) to provide waterproof connections. Before making connections, cut off stripped ends of cable. Insert the 2 wires to be connected into the connector and squeeze the connector with a pair of pliers. Two extra connectors are included.

   Caution Do not strip wires.

4. At the Power Center circuit board, connect sensor wires to the SOL SENS screw terminals. Pay attention to color-coding of wires.
5. Turn on SYST SOLR configuration switch located at the bottom of the Power Center circuit board.
6. Connect solar Valve Actuator cord into AUX VLV socket at the Power Center circuit board.

Note Infield calibration of Solar Temperature Sensor is required. See Calibration for details.

Solar Booster Pump Control

If a solar booster pump is being used, install relay kit (model RLY-LX) into Power Center. Plug

control wire of relay into SOL PMP relay socket.

Two Speed Filter Pump

If the system is equipped with a 2-speed filter pump, install a 2-speed relay kit (model RLY-LXD) into Power Center.

There are two ways to configure the 2-Speed filter pump.

Automatic configuration.

The system will run the filter pump in “low speed” during normal operation, but will automatically switch the pump to “high speed” for 5 minutes whenever the filter pump turns on.

It is additionally possible to activate the pump in “high speed” whenever the SPA, HEATER, SOLAR, or AUX1 is turned on. To enable the pump to run in “high speed” during these conditions, it is necessary to adjust the HI SPD program switch, which is located at bottom of the Power Center circuit board.

Connect RLY-LXD relay control wire into 2SPD relay socket.

Manual configuration.

The system will run the filter pump in “low speed” during normal filter operation, but will switch the pump to “high speed” when the selected auxiliary circuit is activated.

Select an auxiliary circuit (AUX1 - AUX7), and connect RLY-LXD control wire into the appropriate relay socket.

Telephone Module

The Telephone Module (model MOD-TELSPA) allows turning the spa on/off from a phone. If preferred, the Telephone Module can be configured to turn on/off the pool heater instead. The factory default is to control the spa.

To change spa command to pool heater, change the 2 jumpers, which are located at bottom of the Power Center circuit board. Move both jumpers to POOL HEAT position.

- **To install the Telephone Module**

1. Install the Telephone Module into the low voltage compartment of the Power Center.
1. Run a phone line to the Telephone Module.
2. Connect the 4-wire interface cable from the Telephone Module into the PHONE socket at the bottom of the Power Center circuit board.

Dimmer Relay

A maximum of two Dimmer Relays (model RLY-DIM) can be installed. These relays are controlled by Equipment keys 3 and 4. Each relay can switch a maximum of 1000 watts.

- **To install the Dimmer Relay**

1. Install the Dimmer Relay(s) into high the voltage compartment.
2. Plug the control wire(s) into DIMMER 3 and/or DIMMER 4 sockets.
3. Turn on SPEC FNCT configuration switch DIM3 and/or DIM4 located at bottom of the

Power Center circuit board.

Backwash Control

The backwash control system is designed to automatically backwash the filter on a timed basis. This feature uses the AUX7 circuit to control the two backwash valves.

To install an automatic backwash system, you must have a sand filter with a side inlet and outlet. The following additional equipment is required, a Valve Module (model MOD-VLV3), two Valve Actuators (model CVA-24T), and two 3-port valves (model PTV-2T).

- **To install the Backwash Control**

1. Connect a jumper wire between the AUX7 socket and the Valve Module CONTROL JUMPERS socket. Turn on D.I.P. switch number 1 on the Valve Module.
2. Connect backwash Valve Actuator cords into VLV1 and VLV2 sockets on the Valve Module.
3. Turn on SPEC FNCT configuration switch A7BW located at the bottom of the Power Center circuit board.
4. Turn off SPEC FNCT configuration switch A730.
5. Program the backwash interval and duration times at the Control Panel. See Calibration for details.

Floor Cleaner Valve

The Floor Cleaner Valve is designed to control a dual zone floor cleaning system. The Floor Cleaner Valve can be programmed to rotate once every 1-99 minutes while the filter pump is on. Additional parts required, one Valve Actuator (model CVA-24T) and one 3-port valve (model PTV-2T).

- **To install the Floor Cleaner Valve**

1. Install Valve Actuator onto Floor Cleaner valve.
2. Plug valve actuator cord into AUX VLV socket on Power Center circuit board.
3. Connect a jumper wire between the AUX VLV CNTRL and the FLRCL sockets.
4. Turn on SPEC FNCT configuration switch FLRCL located at the bottom of Power Center circuit board.
5. Program the time interval at the Control Panel. See Calibration for details.

Configuration Switches

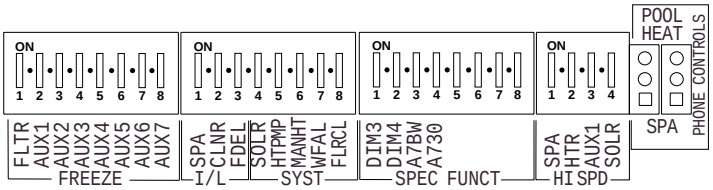

After setting configuration switches, turn system power off for a few seconds.

FREEZE

Freeze settings are used to configure the following equipment.

- FLTR — Activate filter pump during freezing conditions.
- AUX1 — Activate AUX1 during freezing conditions.
- AUX2 — Activate AUX2 during freezing conditions.
- AUX3 — Activate AUX3 during freezing conditions.
- AUX4 — Activate AUX4 during freezing conditions.
- AUX5 — Activate AUX5 during freezing conditions.
- AUX6 — Activate AUX6 during freezing conditions.
- AUX7 — Activate AUX7 during freezing conditions.

I/L - Interlock

Interlock settings are used to configure the following equipment.

- SPA — Activate filter pump (single pump system)
- CLNR — Activate cleaner interlocks. Cleaner must be installed on AUX1.
- FDEL — Activate filter delay (heater cool down).

SYST - System

System settings are used to configure the following equipment.

- SOLR — Activate solar system.
- HTPMP — Activate heatpump as secondary heat source.
- MANHT — Activate heater when spa is manually turned on.
- WFAL — Activate an overflow from spa to pool. Uses AUX2 circuit.
- FLRCL — Activate floor cleaner valve.

SPEC FUNCT - Special Functions

Special Functions settings are used to configure the following equipment.

- DIM3 — Activate dimmer for AUX3 circuit.
- DIM4 — Activate dimmer for AUX4 circuit.

- A7BW Activate backwash for AUX7 circuit.
- A730 Activate 30 minute time-out for AUX7 circuit.

HI SPD - High Speed

High Speed settings are used to configure the following equipment.

- SPA Activate high speed when spa is on.
- HTR Activate high speed when heater is on.
- AUX1 Activate high speed when AUX1 is on.
- SOLR Activate high speed when solar is on.

PHONE CONTROLS

Phone Controls settings are used to configure the following equipment.

- POOL HEAT Activate pool Heat Source key.
- SPA Activate Spa key.

System Start-up

- **To perform initial start-up**

1. At the Power Center, press the Auto/Service key to select Service mode.
2. Press the S key, verify the Intake and Return valves rotate to spa position. If either valve is 180 degrees out of phase, flip the toggle switch on the rear of Valve Actuator to reverse phase (ON1/ON2).
3. Press Equipment keys (Filter, 1, 2, 3, 4, 5, 6, and 7), verify equipment is being activated.
4. Press the Heater key, verify heater fires (Filter pump must also be on).
5. Press the Solar key, verify solar valve (if applicable) rotates to solar position. If it is 180 degrees out of phase, flip the toggle switch on the rear of Valve Actuator to reverse phase (ON1/ON2).
6. Check Sensor Status lights. If a light is on, check appropriate sensor wiring and connections.
7. Press the Auto/Service key to select Auto mode.
8. At the Spa-side Remote, press the Red, Yellow, Green, and Blue key, verify equipment is being activated. Verify the light in the middle of the remote turns on.
9. At the Control Panel, press Equipment keys (Spa, Pool, 1, 2, 3, 4, 5, and 6), verify equipment is being activated.
10. Affix labels provided to identify Equipment keys at the Control Panel, Power Center, and Spa-side Remote.
11. Calibrate sensors. See Calibration for details.
12. Program equipment as needed. See Programming for details.

Operating Instructions

Control Panel

Installed at a convenient location inside the house, the Control Panel provides complete control of all the equipment associated with your swimming pool and spa. The system comes with one Control Panel, however additional Control Panels may be added as needed.

Equipment Keys

Equipment keys activate the Spa, Pool, and up to 6 additional items. Each key can be custom-labeled for your specific application. To turn equipment on or off, press the appropriate Equipment key once. An audible beep will indicate the key has been pressed.

Note Turning off equipment that has been turned on by a program will cancel that program for the day.

Equipment Status Icons

Equipment Status icons are located above each Equipment key.

- A solid ON indicates the equipment is on.

- A solid OFF indicates the equipment is off.
- A blinking ON indicates the cleaner is in a safety delay mode. The cleaner will turn on in 5 minutes.
- A blinking OFF indicates the heater is in a cool down mode. The pool will turn off after 10 minutes.

Equipment Status Lamps

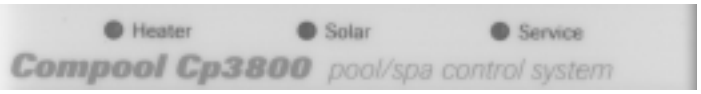

Three Equipment Status lights are located on the top of the Control Panel.

- **Heater** Light on indicates the heater is on.
- **Solar** Light on indicates the solar is on.
- **Service** Blinking light indicates the system is in Service Mode.

Heater Protection

When the pool or spa is turned off, the system may keep the filter pump on for an additional 10 minutes to allow the heater to cool down. During this cool down cycle, and icon on the display will indicate DELAY. Some heaters do not require a cool down period, so this function may have been disabled. See Configuration Switches for details.

Cleaner Protection

Systems with an automatic pool cleaner (booster pump type) will have been set up to control it with equipment key 1. The cleaner will operate in the following way.

- Cleaner turns on pool.
- Cleaner turns on after 5 minute delay.
- Cleaner is disabled while spa is on.
- Cleaner is disabled for 5 minutes when the solar turns on.

Canceling Heater and Cleaner Protection

For testing purposes only, it is possible to cancel the heater and cleaner protection by pressing the CANCEL key, which is located behind the right-side door of the Control Panel.

Temperature Control

Located behind the left door of the Control Panel is the Temperature Control area. Heating choices are selected using the following keys.

Heat Source key

To select heating method, press the Heat Source key through the different heating options.

- **Solar Only** - Heat with solar only.
- **Solar Priority-** Heat with solar when available, otherwise switch to gas heater.
- **Heater** - Heat with gas heater and solar when available.
- **Off** - No heating.

For added convenience, whenever the spa is manually activated (from either the Control Panel or the Spa-side Remote), the Spa Heat Source Lamp will automatically switch to “Heater”. Turning the spa off will return Spa Heat Source Lamp to its previous position.

Note If system does not incorporate solar, the Solar Priority and Solar Only options will not be available.

Temperature keys

To adjust the pool or spa temperature settings, press the appropriate Temperature key once. SET TEMP will be displayed. Press the Temperature keys to adjust desired water temperature. After 5 seconds, the display will automatically return to its original condition.

Fahrenheit/Celsius key

Located behind the right-door of the Control Panel is the Temp. Display key. Press this key to select Fahrenheit or Celsius temperature display.

Programming

Behind the right door of the Control Panel are the keys used to Program equipment.

Programming

Typically only the Pool key (Pool filtration) needs to be programmed. Other Equipment keys can be programmed the same way.

- **To program Pool filtration**

1. Press the Program key.

2. Press the Pool key.

3. Press the Hours/Minutes key to set the START TIME.

4. Press the Enter key.

5. Press the Hours/Minutes key to set the RUN TIME.

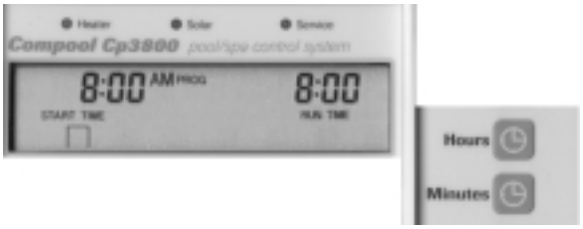

6. Press the Program key to end.

Programming additional Run Times

It is possible to program up to four separate START TIME and RUN TIME's for each equipment key. Follow the previous example to step 2, then press the same equipment key until PROG 2 is displayed. Continue with steps 3-6 to enter the second START TIME and RUN TIME.

Programming a Time-out

By default, manually activated equipment will Time-out after 12 hours. However, it is possible to program a different Time-out period for each equipment key.

Follow Programming example, set START TIME to 0:00 hours. Set RUN TIME to the number of Hour/Minutes before equipment should Time-out.

Note If the RUN TIME is set for 24 hours, manually activated equipment will run continuously until manually turned off.

Programming a Once-only

The Once-only program is used to start the spa after a few hours, for example, you would like to have the spa start in 2 hours. Once the program executes, it is automatically erased.

Follow the programming example above, enter the time the Spa should start (START TIME) and set the RUN TIME to 0:00.

Canceling Programs

- **To cancel all of the programs**

  1. Press the Program key. The Display will show a row of blinking icons located immediately above the eight Equipment keys.
  2. Press and hold down the Cancel key for 5 seconds. After 5 seconds, a continuous alarm will sound (until you release the Cancel key), indicating that all of the programs have been erased.
  3. Press the Program key to end.

- **To cancel an individual program**

  1. When programming or reviewing a program, pressing the Cancel key will return the START TIME and RUN TIME to “0:00”.

Setting the Time of Day

To set the TIME OF DAY, press the Hours/Minutes key to set correct time. Pay attention to the AM/PM symbol.

Remote Control at Spa key

It is possible to disable the Spa-side Remote from your Control Panel by pressing the Remote Control at Spa key. The key is located behind the right-side door of the Control Panel. If the status lamp is on, the Spa-side Remote is operational. If the status lamp is off, the Spa-side Remote is disabled.

Calibration

The temperature sensors, backwash, and floor cleaner valve can be adjusted in the calibration mode. Allow pool to run 5 minutes before calibrating the Water Temperature Sensor.

- **To calibrate equipment**

1. Press the Program key.

2. Press the Spa Heat Source key.

3. Enter correct pool temperature and press Spa Heat Source key.

4. Enter correct solar temperature and press Spa Heat Source key.

5. Enter correct air temperature and press Spa Heat Source key.

6. Enter number of days between backwash and press Spa Heat Source key.

7. Enter number of minutes to backwash and press Spa Heat Source key.

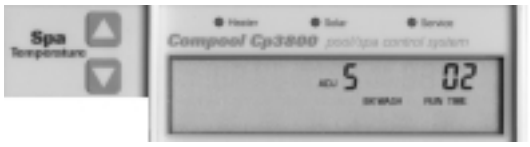

8. Enter floor cleaner valve cycle time and press Spa Heat Source key.

9. Press the Program key to end.

Note Solar, backwash, and floor cleaner valve adjustments are skipped if feature is not enabled.

Tips for calibrating the temperature sensors

- **Water Sensor** Let the pool run for 5 minutes to allow water temperature sensor to accurately pickup current pool water temperature.
- **Solar Sensor** Put a thermometer into direct sunlight and add 10 degrees to the measurement.
- **Freeze Sensor** Shade thermometer from direct sunlight.

Power Center

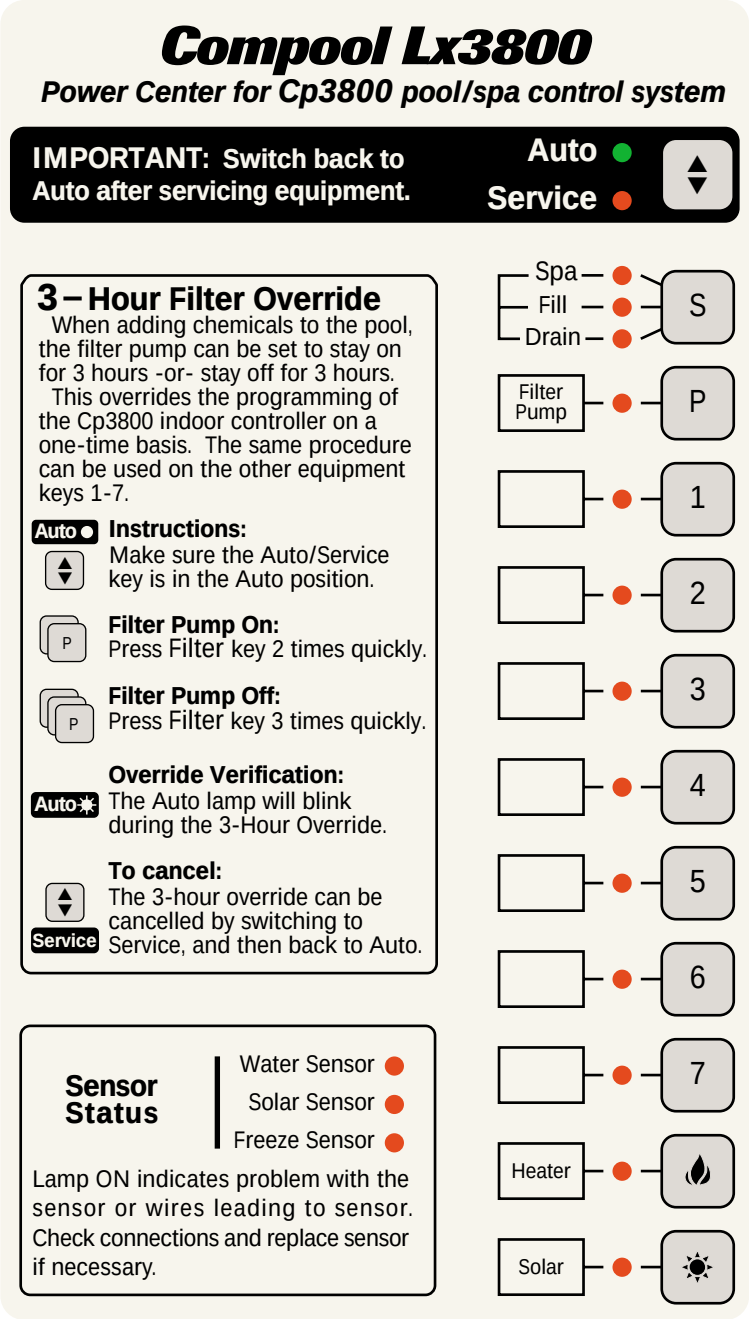

Equipment keys

Located at the equipment pad, the Power Center provides manual-override capability of your equipment.

Caution To prevent water damage, close Power Center door after use.

The Auto/Service key toggles the Power Center between the following modes.

- **Auto** Control Panel and Spa-side Remote are enabled. Power Center keys are disabled.
- **Service** Power Center keys are enabled. Control Panel and Spa-side Remote are disabled.

A blinking “Auto” status lamp indicates that the equipment is undergoing a 3-Hour program override. See 3-hour Filter Override for details.

Caution Manual-activation of equipment from the Power Center, will override any of the built-in equipment interlocks and safety delay circuits.

The S key toggles the Intake and Return Valve Actuators through the following options.

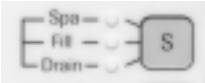

- Spa circulation.
- Fill spa.
- Drain spa.

No status lamp indicates valves are in pool circulation.

The P key turns on the Filter Pump.

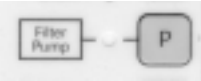

Keys 1-7 activate auxiliary equipment.

Activates the Heater and Solar.

3 - Hour Filter Override

It is possible to override the daily equipment operating cycles, and manually activate (or deactivate) the filter pump and any of the 7 auxiliary circuits for a 3-Hour period. This is particularly useful when adding chemicals to the pool.

Note The Control System must be in “Auto” mode to enable these feature.

To turn the filter pump on, press the P key (Filter Pump) 2 times quickly. The “Auto” mode Status Lamp will begin to blink, and the Filter Pump Status Lamp will illuminate for the 3-Hour cycle.

To turn the filter pump off, press the P key (Filter Pump) 3 times quickly. The “Auto” mode Status Lamp will begin to blink, and the Filter Pump Status Lamp will not be illuminated during the 3-Hour cycle.

Sensor Status

If there is a fault with a temperature sensor, the appropriate status lamp will turn on. Check cable and connections to appropriate sensor. If necessary, replace Temperature Sensor.

Spa-side Remote

The Spa-side Remote allows controlling your equipment from the spa. The light in the middle of the switch will turn on whenever the spa is on. The light will blink when the spa is being heated.

Spa-side Heat Boost

If your Spa-side Remote has one of its buttons designated for the controlling the Heat Boost feature, it is possible to manually activate the heater, and boost the spa temperature for a five minute period. This feature can only be activated if the Spa-side Remote light is not blinking.

To activate the Heat Boost, press the designated button. The light will blink during the 5-minute cycle to indicate that the spa is being heated. If you wish to turn the heater off at any time during this 5-minute cycle, press the Heat Boost button again. The light will stop blinking to indicate that the spa is no longer being heated.

System Options

Telephone Module

The Telephone Module can control your equipment from inside your home or by calling your home from a remote location.

The Telephone Module is most often setup to control the spa, however if the home is a vacation home, you may want to configure it to turn on your pool heater instead. See Configuration Switches for details.

To turn the spa ON or OFF, follow this command:

- Press ‘772’ or ‘SPA’. 2 confirming beeps indicated spa is on, 3 confirming beeps indicate spa is off.

To turn the pool heater ON or OFF, follow this command:

- Press ‘487’ or ‘HTR’. 2 confirming beeps indicated pool heating is enabled, 3 confirming beeps indicate pool heating is off.

Controlling the Telephone Module from outside the home uses the same procedure as described above. The Telephone Module will answer the phone after 30 seconds if no other device answers the phone first. If another device answers the phone first, like an answering machine or fax machine, the Telephone Module will listen for the commands.

2-speed Filter Pump Control

The 2-speed filter pump can be switched to high speed under the following conditions.

- Cleaner is on.
- Spa is on.
- Heater is on.
- Solar is on.

Note When the 2-speed filter is turned on, it will start in high speed and automatically switch to low speed after 5 minutes.

Spa Waterfall Control

The Spa Waterfall feature is similar to filling the spa. This feature uses Equipment key number “2”. See Configuration Switches for details.

Freeze Protection

Where freezing temperatures occur for a few days, it is possible to protect equipment from freeze damage by turning on pumps.

When the Freeze Temperature Sensor detects 35 degrees Fahrenheit or less, the system starts Freeze Protection. An icon on the Control Panel will display FRZ to indicate that Freeze Protection is active. Every 15 minutes the pool/spa valves will rotate to protect the spa plumbing. When air temperature rises above 37 degrees Fahrenheit, the Freeze Protection mode stops. See Configuration Switches to determine what equipment will turn on during Freeze Protection.

Note Freeze Protection will not provide circulation of water through solar panels. Solar panels must be protected by other methods. See Plumbing Requirements for details.

Winterizing the System

In areas where freezing temperatures occur for an extended period of time, it is required to consult a qualified service company to winterize your pool.

Problem Solving

Display shows “Err 1”

If there is a fault with the Water Temperature Sensor, the display will show “Err 1”.

- Check sensor cable and connections.
- Replace Water Temperature Sensor (model TS-5L).

Display shows “Err 2”

If there is a fault with the Solar Temperature Sensor, the display will show “Err 2”.

- Check sensor cable and connections.
- Replace Solar Temperature Sensor (model TS-5L).

Display shows “Err 3”

If there is a fault with the Freeze Temperature Sensor, the display will show “Err 3”.

- Check sensor cable and connections.
- Replace Freeze Temperature Sensor (model TS-5L).

Display shows “Err 4”

If the Control Panel is not able to communicate with the Power Center, the display will show “Err 4”.

- Check communication cable and connections.
- Use test cable provided in low voltage compartment of the Power Center to determine if the cable is the problem.

Display shows “Err 5”

If there is a short at the Spa-side Remote, the display will show “Err 5” and the Remote Control is disabled (see L.E.D. behind right door of Contol Panel).

- Replace Spa-side Remote switch.

Temperature display is not correct

- Calibrate Water Temperature Sensor. See Calibration for details.

Heater does not operate

- Check desired water temperature setting. See Control Panel for details.
- Check Heat Source key. See Control Panel for details.
- Check switches on heater.

Heat Source does not allow Solar

- At the Power Center circuit board, the SPEC FNCT configuration switch SOLR needs to be turned on. See Configuration Switches for details.

Solar heating stops too soon

- Verify solar temperature is calibrated correctly. See Calibration for details.

Spa-side Remote does not operate

- At the Control Panel, verify Remote Control at Spa lamp (behind right-side door), is turned on.

No display at Control Panel

- Check circuit breakers in the Sub-panel and Power Center.
- Check communication cable.

Clock lost time after power failure

- Replace battery located on Power Center circuit board.

System not responding

- Reset the Control Panel. Locate small hole next to the Pool Temperature keys. With a pointed object, push the reset button.
- Reset the Power Center. Locate small hole next to Auto/Service key. With a pointed object, push the reset button.

Determining revision date

- At the Control Panel, press and hold the Enter key. The numbers on the left indicate the Control Panel revision number, the numbers on the right indicate the Power Center revision number.

Warranty

Compool, Inc. warrants to the purchaser of this electronic control system, for the period of one year from the date of original purchase for use, that any defective product proved to be caused by faulty workmanship or faulty material, will be repaired or replaced at Compool's option at no charge, providing the product is returned to Compool with all transportation charges prepaid.

This warranty covers the Control Panel, Power Center, Valve Actuators, and optional Controls including all components and parts. It extends to the first retail purchaser and any subsequent owners of the system.

This limited warranty applies only to controls which have been installed and maintained in strict accordance with installation and operating instructions provided by Compool, Inc., using installation hardware supplied and/or recommended in writing by Compool, and to controls which have been connected to the correct supply voltage.

This limited warranty does not apply to any controls which have been repaired or altered by anyone other than Compool or a person authorized by it; or which have been subject to misuse, neglect or accident; or which have been damaged by wind, rain, lightning, freezing or other cause, thing, person, or act of God; or which have been subject to damage in transit, during installation, or by someone other than Compool, Inc.; or which have been damaged because of a defect in a component or part which is not part of the Compool Control System; or upon which the serial number or manufacture date has been altered, effaced or removed.

This warranty gives you specific legal rights and you may also have other rights which vary from State to State. Compool, Inc. does not authorize any person to create any other obligation or liability in connection with Compool controls.

Compool, Inc. makes no warranty of merchantability or fitness for any use. Any implied warranty applicable to Compool controls is limited in duration to the duration of this written warranty. Unless state law provides otherwise, Compool, Inc. shall not be liable for consequential or incidental damages resulting from breach of this written warranty or any implied warranty, or any inconvenience, loss of time, or incidental expenses such as telephone calls.

Compool, Inc. shall not be liable for any labor charges associated with the removal or reinstallation of any so- claimed defective products.

To exercise this warranty, send defective parts, with copy of dated receipt and a brief description of the problems encountered, postage prepaid, to:

Compool, Inc.
599 Fairchild Drive
Mountain View, California 94043

For questions, repairs, replacement parts, or information on possible Authorized Service Centers within your vicinity call:

Compool, 800-458-2201 or 415-964-2201, Monday - Friday, 8:00 - 5:00 Pacific Time.

Or visit us on the Internet at http://www.compool.com

Index

2-speed Filter Pump Control 36
3 - Hour Filter Override 34
Adding Relays 10
Backwash Control 22
Calibration 31
Canceling Heater and Cleaner Protection 26
Canceling Programs 30
Cleaner Protection 26
Configuration Switches 23
Control Panel 16
Control Panel 25
Dimmer Relay 21
Equipment Keys 25
Equipment keys 33
Equipment Location 7
Equipment Power 10
Equipment Status Icons 25
Equipment Status Lamps 26
Fahrenheit/Celsius key 28
Floor Cleaner Valve 22
FREEZE 23
Freeze Protection 36
Freeze Temperature Sensor 15
Gas Heater Connections 14
Heat Pump or Electric Heater 20
Heater Protection 26
HI SPD - High Speed 24
High Voltage Wiring 8
I/L - Interlock 23
Important Safety Instructions 3
Index 41
Installation 8
Introduction 4
Low Voltage Cables 13
Low Voltage Wiring 12
Modular Crimping Tool 17
Multiple Control Panels 19
Operating Instructions 25
Package Contents 4
PHONE CONTROLS 24
Plumbing Requirements 6
Power Center 33
Power Center Circuit Board 12
Power Center with built in Sub-panel 8

Power Center without built in Sub-panel 8
Problem Solving 38
Programming 28
Programming 29
Programming a Once-only 30
Programming a Time-out 29
Programming additional Run Times 29
Remote Control at Spa key 30
Safety Notice 3
Sensor Status 34
Setting the Time of Day 30
Solar Booster Pump Control 20
Solar Heating 20
Spa Waterfall Control 36
Spa-side Heat Boost 35
Spa-side Remote 18
Spa-side Remote 35
SPEC FUNCT - Special Functions 23
SYST - System 23
System Options 18
System Options 36
System Power 9
System Start-up 24
Telephone Module 21
Telephone Module 36
Temperature Control 27
Two Speed Filter Pump 21
Underwater Lights 11
Valve Actuators 13
Valve Module 19
Warranty 40
Water Temperature Sensor 14
Winterizing the System 37