PENTAIR POOL

INTELLIFLO3® VSF
INTELLIPRO3® VSF

VARIABLE SPEED AND FLOW PUMPS

INSTALLATION AND MAINTENANCE GUIDE

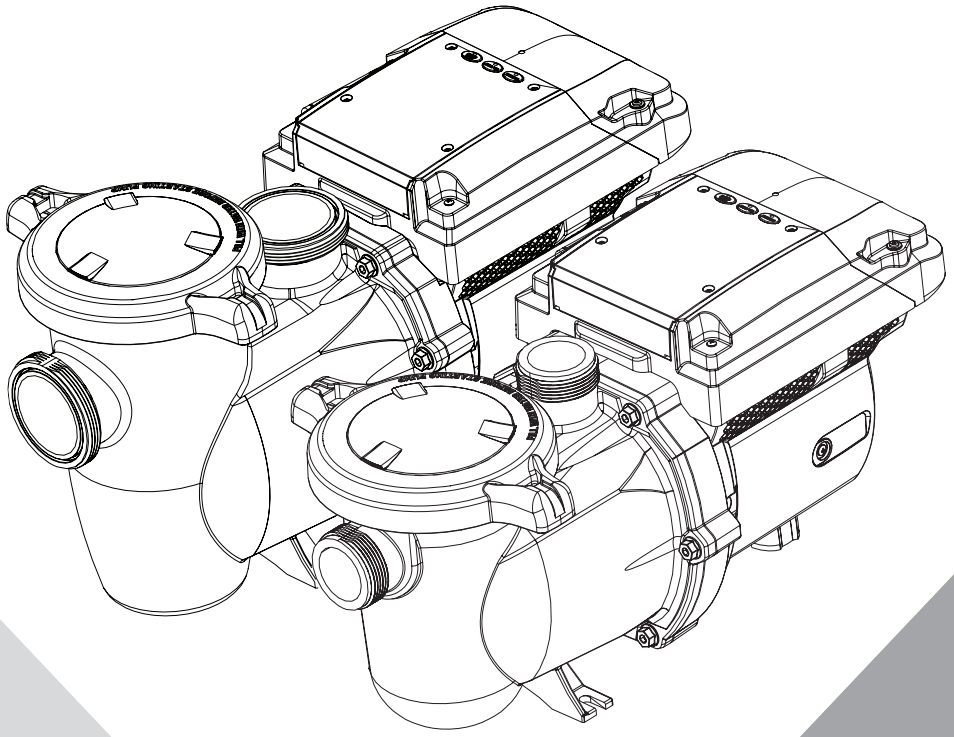

IMPORTANT SAFETY INSTRUCTIONS
READ AND FOLLOW ALL INSTRUCTIONS
SAVE THESE INSTRUCTIONS

To access digital copies of all IntelliFlo3 VSF manuals, scan or click the provided QR code.

Para acceder a copias digitales de todos los manuales de IntelliFlo3 VSF, escanee o haga clic en el código QR proporcionado.

Pour accéder aux copies numériques de tous les manuels IntelliFlo3 VSF, scannez ou cliquez sur le code QR fourni.

IMPORTANT SAFETY INSTRUCTIONS

This guide provides important information that helps ensure proper and safe installation, operation, and maintenance of this equipment. If there are any concerns or questions about tasks described in this manual, consult Pentair or a qualified professional.

ATTENTION INSTALLER! Ensure this guide is given to the pool owner and/or operator after installation.

ATTENTION USER! Retain this guide for future reference.

Call (800) 831-7133 for additional free copies of these instructions or product labels. Refer to www.pentair.com for more information.

READ AND FOLLOW ALL INSTRUCTIONS
SAVE THESE INSTRUCTIONS

This is the safety alert symbol. When you see this symbol in this guide or on the product itself, note the related signal word and be aware of the potential for personal injury.

⚠ DANGER Warns of hazards, that if ignored, will result in death or serious injury.

⚠ WARNING Warns of hazards, that if ignored, could result in death or serious injury.

⚠ CAUTION Warns of hazards, that if ignored, could result in minor or moderate injury.

NOTICE Indicates information, that if ignored, could result in property damage.

Carefully read and follow all instructions in this guide or displayed on the equipment. Ensure all product labels are kept in good condition and replace missing or damaged labels immediately.

⚠ WARNING FAILURE TO FOLLOW ALL INSTRUCTIONS AND WARNINGS COULD RESULT IN DEATH OR SERIOUS INJURY. **INSTALLERS, OPERATORS, AND OWNERS MUST READ AND UNDERSTAND ALL WARNINGS AND INSTRUCTIONS BEFORE OPERATING OR SERVICING THE EQUIPMENT.**

⚠ WARNING This equipment must be installed by a qualified professional in accordance with all applicable codes and ordinances. Improper installation could result in death, serious injury, or property damage.

⚠ WARNING Do not permit children to use this product.

⚠ WARNING **RISK OF ELECTRICAL SHOCK.** Connect only to a branch circuit protected by a ground-fault circuit-interrupter (GFCI). Contact a qualified electrician if you cannot verify that the circuit is protected by a GFCI.

⚠ WARNING This unit must be connected only to a supply circuit that is protected by a ground-fault circuit-interrupter (GFCI). Such a GFCI should be provided by the installer and should be tested on a routine basis. To test the GFCI, push the test button. The GFCI should interrupt power. Push the reset button. Power should be restored. If the GFCI fails to operate in this manner, the GFCI is defective. If the GFCI interrupts power to the pump without the test button being pushed, a ground current is flowing, indicating the possibility of an electric shock. Do not use this pump. Disconnect the pump and have the problem corrected by a qualified professional before using.

General Warnings

- Never open the inside of the drive motor enclosure. There is a capacitor bank that holds a 230 VAC charge even when there is no power to the unit.
- The pump is not submersible.
- The pump is capable of high flow rates; use caution when installing and programming to limit performance potential with old or questionable equipment.
- Code requirements for electrical connection differ from country to country, state to state, as well as local municipalities. Install equipment in accordance with the National Electrical Code and all applicable local codes and ordinances.
- Before servicing the pump, switch OFF power to the pump by disconnecting the main circuit to the pump.
- This appliance is not intended for use by persons (including children) of reduced physical, sensory or mental capabilities, or lack of experience and knowledge, unless they have been given supervision or instruction concerning the use of the appliance by a person responsible for their safety.

⚠ WARNING SUCTION ENTRAPMENT HAZARD: STAY OFF THE MAIN DRAIN AND AWAY FROM ALL SUCTION OUTLETS! **THIS PUMP IS NOT EQUIPPED WITH SAFETY VACUUM RELEASE SYSTEM (SVRS) PROTECTION AND DOES NOT PROTECT AGAINST BODY OR LIMB ENTRAPMENTS, DISEMBOWELMENTS (WHEN A PERSON SITS ON A BROKEN OR UNCOVERED POOL DRAIN) OR HAIR ENTANGLEMENTS.**

THIS PUMP PRODUCES HIGH LEVELS OF SUCTION AND CREATES A STRONG VACUUM AT THE MAIN DRAIN AT THE BOTTOM OF THE BODY OF WATER. THIS SUCTION IS SO STRONG THAT IT CAN TRAP ADULTS OR CHILDREN UNDER WATER IF THEY COME IN CLOSE PROXIMITY TO A DRAIN OR A LOOSE OR BROKEN DRAIN COVER OR GRATE.

THE USE OF UNAPPROVED COVERS OR ALLOWING USE OF THE POOL OR SPA WHEN COVERS ARE MISSING, CRACKED OR BROKEN CAN RESULT IN BODY OR LIMB ENTRAPMENT, HAIR ENTANGLEMENT, BODY ENTRAPMENT, EVISCERATION AND/OR DEATH.

The suction at a drain or outlet can cause:

- **Limb Entrapment:** When a limb is sucked or inserted into an opening resulting in a mechanical bind or swelling. This hazard is present when a drain cover is missing, broken, loose, cracked or not properly secured.
- **Hair Entanglement:** When the hair tangles or knots in the drain cover, trapping the swimmer underwater. This hazard is present when the flow rating of the cover is too small for the pump or pumps.
- **Body Entrapment:** When a portion of the body is held against the drain cover trapping the swimmer underwater. This hazard is present when the drain cover is missing, broken or the cover flow rating is not high enough for the pump or pumps.
- **Evisceration/Disembowelment:** When a person sits on an open pool (particularly a child wading pool) or spa outlet and suction is applied directly to the intestines, causing severe intestinal damage. This hazard is present when the drain cover is missing, loose, cracked, or not properly secured.
- **Mechanical Entrapment:** When jewelry, swimsuit, hair decorations, finger, toe or knuckle is caught in an opening of an outlet or drain cover. This hazard is present when the drain cover is missing, broken, loose, cracked, or not properly secured.

ALL SUCTION PLUMBING MUST BE INSTALLED IN ACCORDANCE WITH THE LATEST NATIONAL AND LOCAL CODES, STANDARDS AND GUIDELINES.

IMPORTANT SAFETY INSTRUCTIONS

⚠WARNING **TO MINIMIZE THE RISK OF INJURY DUE TO SUCTION ENTRAPMENT HAZARD:**

- An approved anti-entrapment suction cover must be used for each drain.
- Regularly inspect all covers for cracks, damage and advanced weathering.
- If a cover becomes loose, cracked, damaged, broken or is missing, replace with an appropriate certified cover.
- Replace drain covers as necessary. Drain covers deteriorate over time due to exposure to sunlight and weather.
- Avoid getting hair, limbs or body in close proximity to any suction cover, pool drain or outlet.
- Disable suction outlets or reconfigure into return inlets.

⚠WARNING The pump can produce high levels of suction within the suction side of the plumbing system. These high levels of suction can pose a risk if a person comes within close proximity of the suction openings. A person can be seriously injured by this high level of vacuum or may become trapped and drown. It is absolutely critical that the suction plumbing be installed in accordance with the latest national and local codes for swimming pools.

⚠WARNING In commercial installations, a clearly labeled emergency shut-off switch for a spa filter pump or jet booster pump must be located in an easily accessible, obvious place. Ensure pool users know where this shut-off switch is located and how to use it in case of emergency.

⚠WARNING Install all system controls (ON/OFF Switches, Timers, Automation Controllers, Valves) so that the system may be serviced and started without placing any portion of the body over or near the pump strainer lid, filter lid, or valve closures. Failure to follow these instructions could result in death or serious injury.

⚠WARNING Pumps improperly sized or installed or used in applications other than for which the pump was intended can result in severe personal injury or death. These risks may include but not be limited to electric shock, fire, flooding, suction entrapment or severe injury or property damage caused by a structural failure of the pump or other system component.

The Virginia Graeme Baker (VGB) Pool and Spa Safety Act creates new requirements for owners and operators of commercial swimming pools and spas.

Commercial pools or spas constructed on or after December 19, 2008 shall utilize a multiple main drain system without isolation capability and suction outlet covers meeting APSP/ICC/ANSI 16 Standards and installed to the PHTA/ICC/ANSI 7 Standard.

Commercial pools and spas constructed prior to December 19, 2008, with a single submerged suction outlet shall utilize a suction outlet cover meeting APSP/ICC/ANSI 16 standards and installed to the PHTA/ICC/ANSI 7 standard, as well as one of the following:

i. An SVRS meeting ASME/ANSI A112.19.17 and/or ASTM F2387
ii. A properly designed and tested suction-limiting vent system
iii. An automatic pump shut-off system
iv. Disabled submerged outlets
v. Suction outlets shall be reconfigured into return inlets.

⚠WARNING **TRAPPED AIR CAN LAUNCH SYSTEM COMPONENTS WITH DEADLY FORCE!** When any part of the filtration system is serviced, air can enter the system and become trapped. Trapped air can cause system components to violently separate, and could result in death, serious injury, and/or property damage.

General Installation Information

- This pump is for use with permanent swimming pools and may also be used with hot tubs and spas if so marked. Do not use with storable pools. A permanently-installed pool is constructed in or on the ground or in a building such that it cannot be readily disassembled for storage. A storable pool is constructed so that it is capable of being readily disassembled for storage and reassembled to its original integrity.
- All work must be performed by a qualified professional, and must conform to all national, state, and local codes.
- Install to provide drainage of compartment for electrical components.
- These instructions contain information for a variety of pump models and therefore some instructions may not apply to a specific model. All models are intended for use in swimming pool applications. The pump will function correctly only if it is properly sized to the specific application and properly installed.

Single speed pumps and replacement motors rated at 1 HP or greater cannot be sold, offered for sale, or installed in a residential pool for filtration use in California, Title 20 CCR sections 1601-1609.

CUSTOMER SERVICE / TECHNICAL SUPPORT

Hours: 9:00AM to 7:00PM EST (6:00AM - 4:00PM PST)

Call: (800) 831-7133

Visit: www.pentair.com

Fax: (800) 284-4151

TABLE OF CONTENTS

IMPORTANT SAFETY INSTRUCTIONS ..... **i**

OVERVIEW **1**
- Available Accessories 1
- Motor Features 1
- Drive Features 1
- Flexible Demand Features 1

INSTALLATION **2**
- Install Location 2
- Plumbing and Fittings 3
- Valves 3
- Electrical Installation 4
  - Electrical Specifications 4
  - Wiring 4
  - Grounding 4
  - Bonding 4
- Connecting to an Automation System 5
- Relay Board Digital Inputs 6

OPERATION **7**
- Drive Controls/Buttons 7
- Priming the Pump 7
- Default Settings 8
  - Restore System Defaults 8
  - Factory Reset 8
- Pentair Pool App Operation 9
- Touchscreen Operation 9
  - Pump Dashboard 9
  - Program Setup 10
  - Device Settings 11
  - Relay Settings 12
  - Priming Parameters 12
  - Limits Parameters 13
  - Touchscreen Menu Tree 14

MAINTENANCE **15**
- Cleaning the Pump Strainer Basket 15
- Winterizing 15

SERVICING **16**
- Motor and Drive Care 16
- Disassembly 17
- Reassembly 17
- Pump Disassembly/Reassembly Diagram 18
- Drive Removal and Installation 19
- Relocating the WiFi Antenna 19

TROUBLESHOOTING **20**
- Drive LED Indicators 20
- Troubleshooting Chart 20
- Alarms and Warnings 23

REPLACEMENT PARTS **24**
- Parts List (1.5 HP Models) 25
- Parts List (3 HP Models) 25

TECHNICAL DATA **26**
- 1.5 HP Pumps 26
  - Technical Specifications 26
  - Pump Dimensions 26
  - Pump Performance Curves 26
- 3 HP Pumps 27
  - Technical Specifications 27
  - Pump Dimensions 27
  - Pump Performance Curves 27

Your feedback could play an important role in Pentair's goal to continuously improve our instructional material, and better support those who install, maintain, and use our products everyday.

Scan or click the QR code to take a quick survey and help us provide the most easy-to-use and accurate product manuals possible!

GENERAL INFORMATION

IntelliFlo3 VSF and IntelliPro3 VSF Variable Speed and Flow Pumps can be programmed to run at desired speeds or flow rates over set periods of time. This provides maximum operating efficiency and energy conservation for a variety of inground pools.

- The pump can operate at a percentage of maximum motor speed, or can be set to control its own speed and maintain a constant flow rate.
- Set a pump Flow Program to the desired flow rate, and the pump automatically adjusts to maintain the programmed flow rate. Programs can be set between 20-90 GPM (1.5 HP models) or 20-140 GPM (3 HP models).
- Up to 8 customizable programs that can be set for constant flow or speed in either Manual, Timer or Schedule modes.
- Programmable priming cycle with automatic prime detection for easy start-up and detection of loss of prime.

Available Accessories

- Drive-mounted Touchscreen Controller (P/N 356159z - Almond, P/N 356348z - Black)
- Relay Control Board Kit (P/N 356365z)
- 3-inch Union Kit for 3 HP Pumps (P/N 410029)
- Retrofit Riser Base Kits (refer to table below)

Model	Replacing	Kit P/N
1.5 HP	IntelliFlo	357831z
	WhisperFlo	357831z
	IntelliPro	357832z
	Max-E-Pro	357832z
	Challenger	357832z
3 HP	IntelliPro	357833z
	Max-E-Pro	357833z
	Challenger	357833z

Motor Features

- Permanent-magnet, Totally Enclosed Fan-cooled (TEFC) motor
- Exceeds all Department of Energy and Energy Star requirements
- Operates at lower temperatures due to high efficiency
- Designed to withstand outdoor environment
- Quiet operation
- **WEF**: 7.1 **THP**: 3.0 (3 HP models)
  WEF: 9.4 **THP**: 1.5 (1.5 HP models)

Drive Features

The pump drive is designed to produce maximum motor operational efficiency. The drive controls the motor's rotational speed by controlling the frequency of the supplied current. It also protects the motor and pump from operating outside of their intended operating parameters.

- WiFi and *Bluetooth*® Wireless Technology Connectivity
- Pentair Pool App Compatibility
- Flow based programming for precise and continuous control of pump output
- RS-485 Digital Automation Connection
- Dry Startup and Loss of Prime Detection
- Self-priming

Flexible Demand Features

IntelliFlo3 VSF and IntelliPro3 VSF pumps include Flexible Demand features offering an opportunity, only with the user's consent, for the user to participate in energy provider incentive programs to offset pump energy usage.

Participating in one of these programs may provide an incentive to the user, such as a monetary reward or electrical bill credit.

When enrolled in one of these programs, these features allow the energy provider (or other entities authorized by the user) the ability to automatically schedule, shift, or even curtail the pump's energy consumption during times when electricity is more expensive, the electrical grid is stressed, and/or when there is an abundance of renewable energy on the grid. However, users may override or opt-out of such events.

Following one of these scenarios, the pump will then adjust its operation to maintain proper filtration and chemical dispersion.

Improper configuration or operating requirements may affect pool performance regardless of whether demand response is enabled. Users are responsible for configuring operating requirements and settings appropriate for their pool conditions.

To access the Flexible Demand User Guide, and learn more about Flexible Demand features and how to enroll, scan or press the provided QR code.

INSTALLATION

Only a qualified professional should install the pump. Refer to ***IMPORTANT SAFETY INSTRUCTIONS, page i*** for additional installation and safety information.

⚠ WARNING

Install all system controls (ON/OFF Switches, Timers, Automation Controllers, Valves) so that the system may be serviced and started without placing any portion of the body over or near the pump strainer lid, filter lid, or valve closures. Failure to follow these instructions could result in death or serious injury.

Note: The pump should not be connected in series with other pumps.

Install Location

Ensure the install location meets the following requirements:

1. Install the pump a minimum of 5 ft (1.5 m) from the inside wall of the pool. Canadian installations require a minimum of 9.8 ft (3 m) from the inside wall of the pool.
2. Install the pump a minimum of 3 ft (0.9 m) from a heater outlet.
3. Do not install the pump more than 10 ft (3.1 m) above the pool water level.
4. Provide at least 3-inch (7.6 cm) of side and rear clearance for motor disassembly and removal.
5. Provide at least 6-inch (15.2 cm) of vertical clearance above the for drive disassembly and removal.
6. Install the pump in a well ventilated location protected from excessive moisture, dirt and heat (i.e., rain gutter downspouts, sprinklers, etc.)
7. Secure the pump to the equipment pad at the two anchor points located under the pump volute. Anchor points are sized for up to 3/8-inch concrete anchors.
8. Do NOT install this pump within an outer enclosure or beneath the skirt of a hot tub or spa unless marked accordingly.

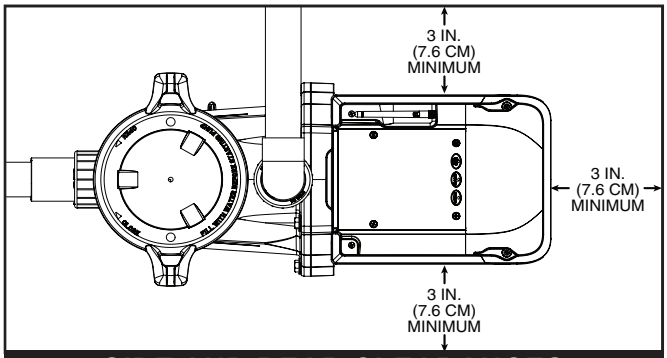

SIDE AND REAR CLEARANCES

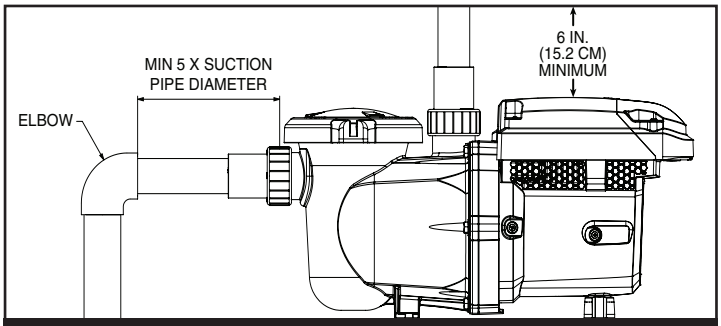

VERTICAL CLEARANCE

Plumbing and Fittings

1. Provided union kit allows for easy plumbing to a variety of pipe diameters. Refer to *UNION KIT OPTIONS*.
2. For improved plumbing a larger pipe size should be used.
3. To reduce friction loss and improve efficiency, short and direct suction and return lines are best.
4. **Suction Connections:**
   a. Do not install any 90° elbows directly into the pump inlet.
   b. Suction line diameter should be the same or larger than the return line diameter.
   c. Valves, elbows or tees installed in the suction line should be no less than five times the suction pipe diameter from the pump inlet. Refer to *SUCTION PLUMBING REQUIREMENTS*.
   Example: A 2-inch pipe requires 10 inches (25.4 cm) of straight run from the suction inlet.
5. **Discharge Connections:**
   a. **DO NOT install 90° STREET elbows directly into the pump outlet.** However, 90° *SWEEP* elbows may be used.

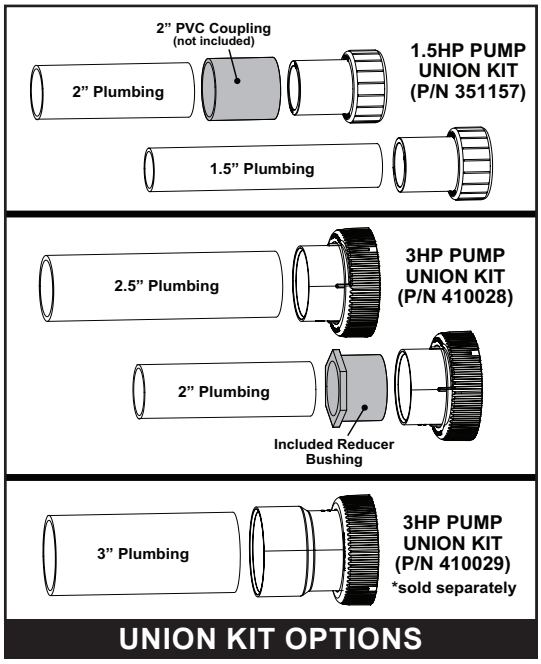

UNION KIT OPTIONS

Valves

1. Flooded suction systems should have valves installed in both the pump suction and return lines. This allows the pump to be isolated during routine maintenance.
2. Install a check valve in the return line when using this pump for any application where there is significant height to the plumbing after the pump.
3. Install check valves when plumbing in parallel with another pump. This helps prevent reverse rotation of the impeller and motor.

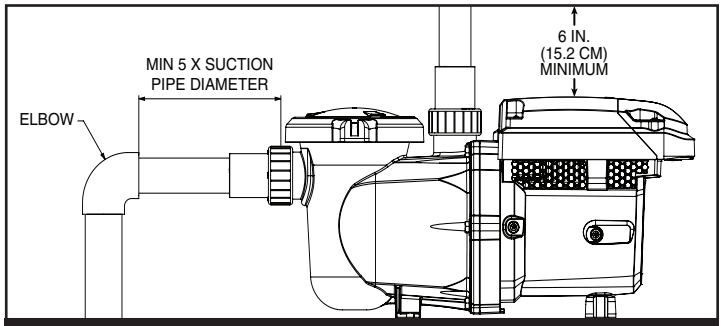

SUCTION PLUMBING REQUIREMENTS

Electrical Installation

WARNING **RISK OF ELECTRICAL SHOCK OR ELECTROCUTION.** This pump must be installed by a qualified professional. Improper installation will create an electrical hazard which could result in death or serious injury due to electrical shock.

Always disconnect power to the pump at the circuit breaker before servicing the pump. Failure to do so could result in death or serious injury.

Electrical Specifications

Model	Voltage (VAC)	Max Amps	Input (Hz)
1.5 HP	115/208-230	12/6.4-5.9	50/60
3 HP	208-230	12.4-11.2	50/60

The drive will operate on 2-Phase Line-Line-Ground, as well as Line-Neutral-Ground electrical systems.

Wiring

1. Ensure all necessary electrical breakers and switches are disconnected before wiring the motor.

   WARNING **STORED CHARGE!** Wait a minimum of 60 seconds before servicing.

2. Ensure the supply meets the requirements listed on the motor nameplate. If these requirements are not met, permanent motor damage may occur.
3. If connecting the pump to an automation system or timer, power to the pump must be supplied directly from an independent GFCI-protected circuit.

   NOTICE Variable speed pumps require continuous power. Repeatedly cycling power to the pump will damage the motor.

   Note: Pentair offers 2-Pole, 20 Amp GFCI breakers (P/N P220GFA) that meet NEC Standards for pool pumps.

   Note: If using a two-pole relay or timer, apply and remove power to both POWER LINE TERMINALS.

4. ALWAYS reinstall the wiring compartment cover when leaving the pump unsupervised.
5. Use strain reliefs and ensure all electrical connections are tight.

   Note: Unused knockouts should be sealed with the provided conduit plugs.

6. Cut all conductors to appropriate lengths to prevent arcing once connected.
7. For wiring sizes and general electrical guidelines, refer to applicable national and local codes.

Grounding

1. Permanently ground the drive using the green Ground Screw and ensure the ground wire is connected to an electrical service ground.

Bonding

1. Electrically bond the motor according to applicable national and local codes.
2. US installations require 8 AWG or larger solid copper bonding conductor. In Canada, 6 AWG or larger is required.
3. The bonding wire should be connected to the pump Bonding Lug on the side of the motor. Connect the wire to all metal parts of the pool, electrical equipment, metal conduit, and metal piping within 5 ft. (1.5 m) of the inside walls of the pool.

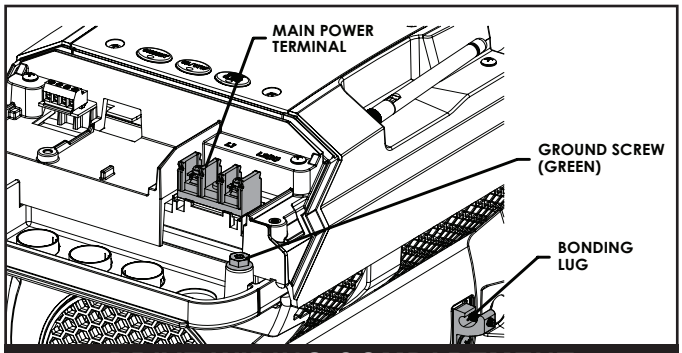

DRIVE WIRING COMPARTMENT

Connecting to an Automation System

All IntelliFlo3 VSF and IntelliPro3 VSF pumps are compatible with Pentair automation systems. Refer to the automation system manual for further details on connecting your pump to a specific automation system.

When connecting to a Pentair Automation System, connect 18 to 24 AWG, two-conductor cable to DATA+ and DATA- terminals only. If needed, 12V and Ground terminals are also provided.

WHEN THE PUMP IS CONNECTED TO AUTOMATION:

- CONNECT LED will pulse Magenta/Pink
- Touchscreen Controller (if installed) will display a message indicating the pump is being controlled by an automation system
- Pentair Pool app will display a message confirming the pump is being controlled by an automation system
- All pump control is handled by the automation system
- When putting the automation mode into Service Mode, the automation system will return control to the pump

⚠WARNING An IntelliTouch Automation System with firmware 1.170 or earlier will display "VSF+SVRS" in the pump type/selection. While you will choose this option, **the pump does NOT incorporate SVRS entrapment protection.**

⚠WARNING **If operating the pump with a Pentair automation system, when the pump is disconnected from automation or in service mode it will continue operating according to the factory default programs/schedules. Ensure programs/schedules are edited or disabled before servicing the pump.**

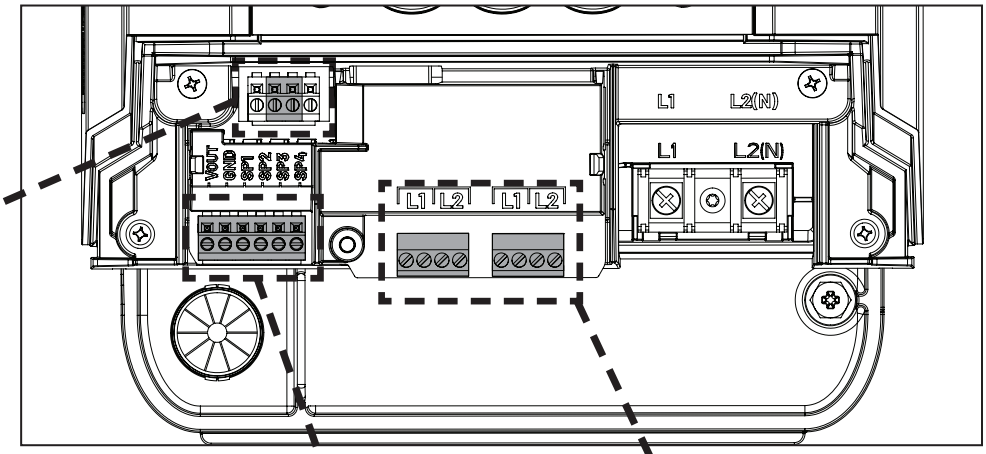

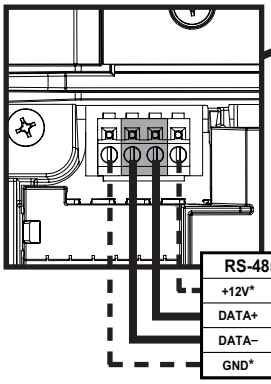

RS-485 WIRING	
+12V*	RED*
DATA+	YELLOW
DATA–	GREEN
GND*	BLACK*

RS-485
(Low Voltage)

***Note**: When connecting to a Pentair Automation System, connect 18 to 24 AWG, two-conductor cable to the DATA+ and DATA- terminals only.

If needed, 12V and Ground terminals are also provided.

Refer to the automation system manual for further details.

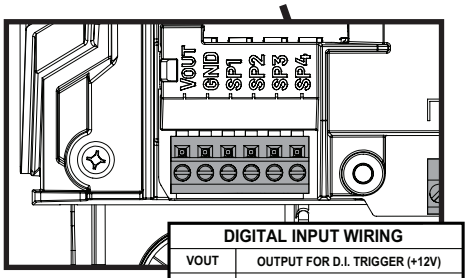

DIGITAL INPUT WIRING	
VOUT	OUTPUT FOR D.I. TRIGGER (+12V)
GND	GROUND
SP1	SPEED 1 DIGITAL INPUT (5-30 VAC/DC)
SP2	SPEED 2 DIGITAL INPUT (5-30 VAC/DC)
SP3	SPEED 3 DIGITAL INPUT (5-30 VAC/DC)
SP4	SPEED 4 DIGITAL INPUT (5-30 VAC/DC)

DIGITAL INPUTS**
(Low Voltage)

****Note**: Digital Input and Pump Relay connections are only available if the optional Relay Control Board (P/N 356365z) is installed.

Refer to *Relay Board Digital Inputs, page 6* for more information.

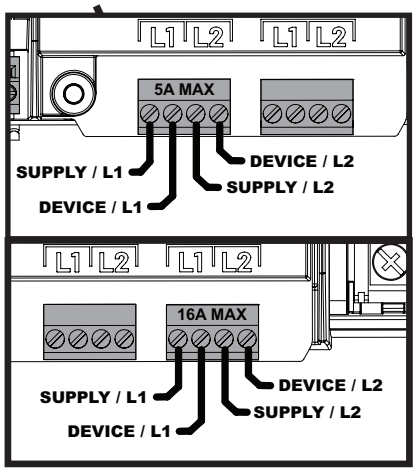

PUMP RELAYS** 0-300 VAC, 0-48 VDC	
5A (Left-side)	Salt Chlorine Generator
	Pool Light / Transformer
16A (Right-side)	Booster Pump
	Single Speed Pump
	Spa Blower

Relay Board Digital Inputs

If the optional Relay Control Board Kit (P/N 356365z) is installed, the digital inputs can be connected to an automation system in order to control four customizable speed or flow programs. ***If using digital inputs, schedules programmed via the Pentair Pool app or drive touchscreen must be deleted.***

> ***Note:*** If multiple external input triggers are received, programs will follow the following priority: PROGRAM 4 > 3 > 2 > 1.
>
> ***Note:*** If the pump has been stopped via the ON/STOP button (ON/STOP LED is solid red), ON/STOP must be pressed again before the pump will operate.

When a low voltage signal is received by a control board digital input, the pump will run the program set to that specific digital input. This digital input program will override any scheduled programs, automation or manual input.

> ***Note:*** Refer to the *Pentair Pool User's Guide (P/N 356088)* for instructions on viewing and editing the pump programs.
>
> ***Note:*** Refer to the *Relay Control Board Installation Guide (P/N 356994)* for instructions on installing the control board.

The Relay Control Board also provides a +12V Output Signal (marked VOUT) that can be used to trigger its own Digital Inputs. This output signal is the recommended input for Speed Digital Inputs.

The output signal will need to be switched via an External Control (i.e. automation relay, external switch) to activate the desired speed program.

> **Note: This VOUT output signal is output from the drive ONLY and should never be wired to a voltage supply!**

DEFAULT EXTERNAL CONTROL PROGRAMS	
Program 1	40% Speed
Program 2	60% Speed
Program 3	80% Speed
Program 4	100% Speed

RELAY CONTROL BOARD

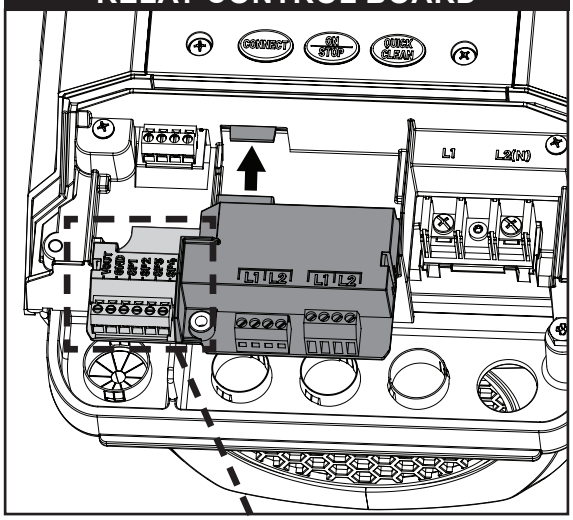

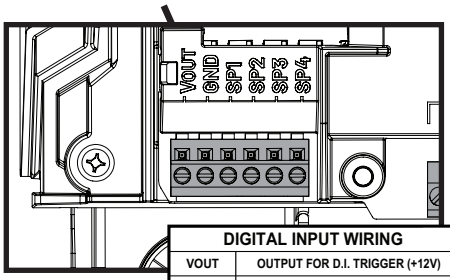

DIGITAL INPUT WIRING	
VOUT	OUTPUT FOR D.I. TRIGGER (+12V)
GND	GROUND
SP1	SPEED 1 DIGITAL INPUT (5-30 VAC/DC)
SP2	SPEED 2 DIGITAL INPUT (5-30 VAC/DC)
SP3	SPEED 3 DIGITAL INPUT (5-30 VAC/DC)
SP4	SPEED 4 DIGITAL INPUT (5-30 VAC/DC)

DIGITAL INPUTS (Low Voltage)

OPERATION

⚠WARNING **Before starting the pump, ALWAYS follow the instructions below. Failure to follow these instructions could result in property damage and/or personal injury.**

1. Open the filter's air relief valve.
2. Open all suction and return line valves.
3. Ensure pool return line is completely open and clear of any blockages.
4. Ensure the strainer pot is filled with water.
5. Stand clear of the filter or other pressurized vessels.

⚠CAUTION Never allow the pump to run without both halves of the motor shroud installed. Operating the pump without motor shrouds installed may cause the drive to overheat and damage the drive.

Drive Controls/Buttons

Refer to *Drive LED Indicators, page 20* for a list of drive LED behaviors.

CONNECT: Press to connect the pump to the Pentair Pool app. Refer to the *Pentair Pool User's Guide (P/N 356088)* for instructions.

ON/STOP: Press to enable or disable the pump. By default, pressing this button will either begin the priming cycle and then run the appropriate program or deactivate the pump.
If the pump is deactivated via the ON/STOP button, ON/STOP must be pressed again before the pump will operate.

QUICK CLEAN: Press to manually start the Quick Clean program. This feature can used to temporarily override a schedule and increase pump speed while vacuuming or adding chemicals to the pool.
Once a Quick Clean cycle has ended, the pump will resume its normal schedule.

Priming the Pump

⚠WARNING **Do NOT** run the pump dry. If the pump is run dry, the shaft seal will be damaged and the pump will start leaking. If this occurs, the damaged seal must be replaced.

⚠WARNING **ALWAYS** maintain proper water level in your pool (half way up skimmer opening). If the water level falls below the skimmer opening, the pump will draw air through the skimmer, losing the prime and causing the pump to run dry, resulting in a damaged seal. Continued operation in this manner could cause a loss of pressure, resulting in damage to the pump case, impeller and seal and may cause property and personal injury.

This pump is shipped with Priming ENABLED. Unless the priming settings are changed, the pump will speed up to the maximum speed when the pump is powered on for the first time, and the ON/STOP button is pressed.

The pump must be filled with water and primed before initial startup and after servicing. To avoid permanent damage to the pump, follow the instructions below.

Refer to the *Pentair Pool User's Guide (P/N 356088)* for a list of app priming settings and programming instructions.

Note: If programming priming via the optional Drive-mounted Touchscreen Controller, refer to ***Priming Parameters, page 12***.

TO PRIME THE PUMP:

1. **Press ON/STOP to stop the pump and disconnect all power to the pump at the circuit breaker.**
2. Close all valves in suction and return lines.
3. **Open the filter's air relief valve and stand clear of the filter until all pressure has been relieved and the pressure gauge reads 0 (zero) psi.**
4. Turn the Strainer Pot Lid counter-clockwise and remove it from the pump.
5. Fill the strainer pot up to the Suction Port with water.
6. Place the lid onto the strainer pot and tighten until the lid handles are perpendicular to the suction port.

   Note: Ensure the lid O-ring is properly seated and is not being pinched between the lid and strainer pot.
7. Open all valves in suction and return lines.
8. Open the filter's air relief valve and stand clear of the filter.
9. Reestablish power to the pump at the circuit breaker.

- Continue to the next page -

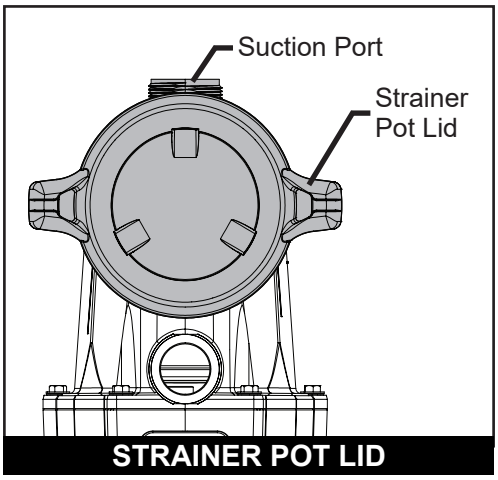

⚠CAUTION Do not add chemicals to the system directly in front of the pump. Adding undiluted chemicals may damage the pump and will void the warranty.

⚠CAUTION This is a variable speed pump. Typically lower speeds are used for filtration and heating. Higher speeds can be used for spa jets, water features, and priming.

Priming the Pump (continued)

10. Press ON/STOP to start the pump.
    The pump will begin to prime (if enabled) and ramp up to the programmed priming speed.
11. When a steady stream of water appears from the air relief valve, close the valve.
12. Do not allow your pump to run longer than 30 minutes without successfully priming.
    If the pump does not prime, check your priming settings or refer to ***TROUBLESHOOTING, page 20***.

Default Settings

If the pump is started using the ON/STOP button before a customized schedule is programmed, the pump will run the default Program 1 schedule (24 hours at 30 GPM). The Quick Clean button can be used to temporarily override this default Program 1 schedule. Default programs can be edited via the Pentair Pool app or the using the optional touchscreen.

Restore System Defaults

Restoring system defaults will delete all custom programs and restore all default settings and programs. Network settings and the security PIN (if enabled) will be retained. This can be done via the Pentair Pool app, drive controls, or optional touchscreen controller.
To restore system defaults using drive controls, disable the pump then press and hold both the CONNECT and QUICK CLEAN buttons for 3 seconds.

Factory Reset

A factory reset erases all user-entered information, including custom programs, security PIN, and network settings. All programs will be restored to factory defaults. A factory reset can only be performed using the drive controls.
To perform a factory reset, disable the pump then press and hold all three buttons for 3 seconds.

Refer to the tables below for factory default settings:

PROGRAMS	
Program 1	Schedule Mode; 30 GPM
	12 AM to 12 AM (24 Hour)
Quick Clean	Timer Mode; 70% Speed
	1 Hour
PRIMING PARAMETERS	
Priming Mode	Enabled
Dry Run Detection	Enabled
Priming Speed	100%
Max Priming Duration	11 Minutes
Priming Range	5
Delay	20 Seconds
Loss of Prime Detection	Enabled
LIMITS PARAMETERS	
Min Speed	1%
Max Speed	100%
Min Flow	20 GPM
Max Flow	90 GPM (1.5 HP Pumps)
	140 GPM (3 HP Pumps)
Flow Limit - Speed Programs	Disabled
Max Pressure	20 PSI (1.5 HP Pumps)
	30 PSI (3 HP Pumps)
Pressure Limit - Speed Programs	Disabled

THERMAL MODE	
Thermal Mode	Enabled
Temp Set Point	40°F
Pump Setting	20% Speed
AUTOMATION ADDRESS	
Pump Address	1
EXTERNAL CONTROL PROGRAMS	
Program 1	40% Speed
Program 2	60% Speed
Program 3	80% Speed
Program 4	100% Speed
RAMPING SPEED	
Speed	Fast
DEVICE SECURITY	
Security PIN	Disabled
OTHER	
Language	English
Time Zone	UTC -5:00
Daylight Savings Time	Enabled
Units	°F / GPM / PSI

Pentair Pool App Operation

The IntelliFlo3 VSF or IntelliPro3 VSF pump is fully compatible with the Pentair Pool app. The app allows you to program and operate the pump from a smart device.

For instructions on creating a Pentair Pool app account and operating the pump via the app, refer to the *Pentair Pool User's Guide (P/N 356088)* provided with your pump.

If the original user's guide is not available, scan the QR code to access a digital copy.

Touchscreen Operation (if installed)

If you prefer to control your pump directly from the equipment pad, a touchscreen controller allows you to adjust pump settings and program run schedules via a touchscreen mounted directly onto the pump drive. The following sections provide instructions for using your touchscreen controller.

Some pump models do not include a touchscreen controller out-of-box, but a touchscreen can be added to any IntelliFlo3 VSF or IntelliPro3 VSF pump. If you would like to add a touchscreen to your pump, Pentair offers a Touchscreen Controller Kit (Almond - P/N 356159z, Black - P/N 356348z).

Pump Dashboard

The Pump Dashboard is your pump's home screen. Basic pump info, run status and programming can be viewed from this screen.

Pump alerts or other problems will also display on this screen.

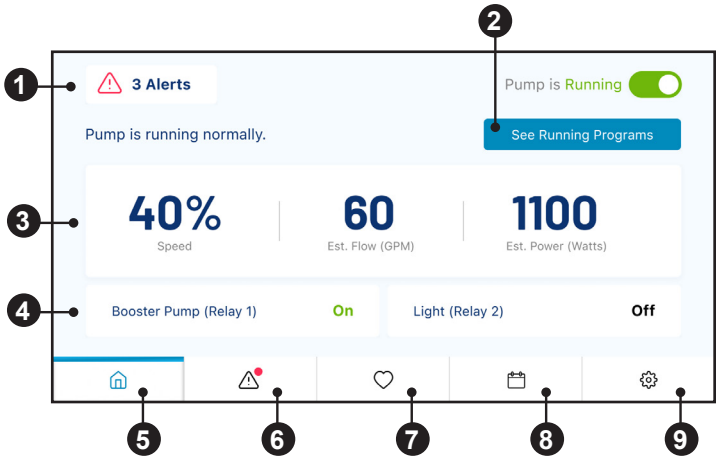

Note: Speed, flow, and power consumption shown above are for illustrative purposes only. These values will vary by pool.

1– **Active Alerts:** Displays any active pump alerts and/or warnings.

2– **See Running Programs:** View and edit your pump's current programs. Refer to *Program Setup, page 10*.

3– **Current Run Data:** Displays the current pump state and program run data when the pump is running.

4– **Relay Device Status:** Displays the status (ON/OFF) of devices connected to the pump's 5A and/or 16A relay terminals.

Note: Relay statuses will only display if the optional Relay Control Board (P/N 356365z) is installed.

5– **Pump Dashboard ( ):** Return to the Pump Dashboard (this screen) from any screen.

6– **Alerts ( ):** Display active pump alerts and warnings from any screen. A dot to the right of the alert icon signifies an active alert or warning.

7– **Favorite Programs ( ):** Display favorited programs from any screen. A program can be favorited by tapping the Heart icon in the top right corner of a program editing screen. Refer to *Program Setup, page 10*.

8– **All Programs ( ):** View and edit programs from any screen. Refer to *Program Setup, page 10*.

9– **Device Settings ( ):** View and edit device settings from any screen. Refer to *Device Settings, page 11*.

Program Setup

Pump Dashboard > All Programs > Program Setup

Programs can be individually set and edited from the All Programs screen, accessed from the Pump Dashboard.

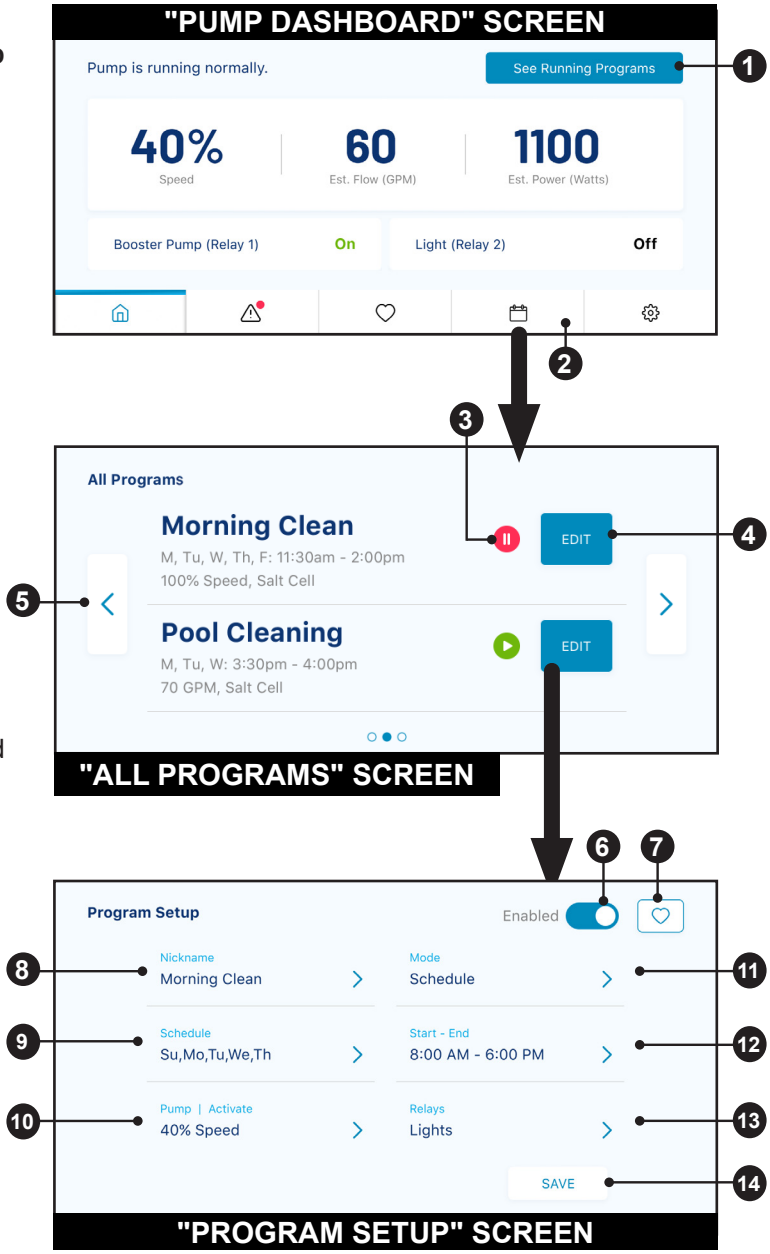

PUMP DASHBOARD SCREEN

1– **See Running Programs:** View and edit all enabled pump programs.
Opens the See Running Programs screen.

2– **All Programs Icon (📅):** View and edit any enabled or disabled pump program.
Opens the All Programs screen.

ALL PROGRAMS SCREEN

3– **Pause/Run Buttons:** Tap the Pause Icon (⏸) to pause a running program.
Tap the Run Icon (▶) to manually start a program.

4– **Edit Program:** Edit or view a particular program.
Opens the Program Setup screen.

5– **Scroll Programs:** Scroll through both enabled and disabled programs currently programmed for the pump.

Note: If using the optional Relay Control Board, external control programs will display in the list of programs.
Refer to *Relay Board Digital Inputs, page 6* for more information

PROGRAM SETUP SCREEN

6– **Enable/Disable Program:** Enable or disable the program currently being edited.

7– **Favorite Program:** Add/remove programs to or from your list of favorites. The program will show up in a list of favorite programs accessed via the (♡) icon.

8– **Nickname:** Set the program nickname. This will be the name the program displays on the All Programs and Pump Dashboard screens.

9– **Schedule:** Set which days of the week the program will activate the pump.

Note: This option will only appear when editing a Schedule program.

Note: If setting a Timer program, "Schedule" will be replaced by "Timer".

10- **Pump | Activate:** Set the speed or flow that a program will run when activated.

11- **Mode:** Select which type of program you wish to setup.
MANUAL and TIMER programs will not resume after they are overridden by another program or manually stopped by the user.

- **Manual:** Program will only run, at the set speed or flow, when manually activated.
- **Timer:** Program will only run, at the set speed or flow and duration, when manually activated.
- **Schedule:** Program will run on the days and times, and at the speed or flow, that are programmed.

12- **Start - End:** Set the time of day, on the days of the week, that a Schedule program will activate and deactivate the pump.

Note: This option will only appear when editing a Schedule program.

13- **Relays:** Set which relay devices will activate when the program is running.

Note: This option will only display if the optional Relay Control Board (P/N 356365z) is installed.

14- **Save:** Save edits made to a program.

Device Settings

Pump Dashboard > Device Settings

Device Settings can be accessed by pressing the Device Settings gear icon (⚙) in the bottom-right of the Pump Dashboard.

Tap EDIT to enter any of the menus described below:

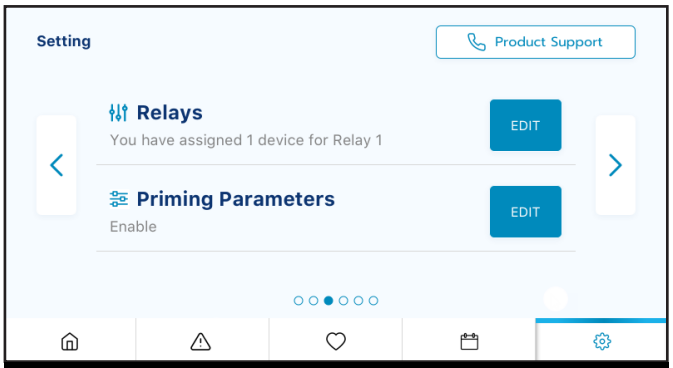

"DEVICE SETTINGS" SCREEN

1– **Product Overview:** View general information about your pump such as device nickname, address or software version.

2– **Screen Orientation:** Choose how the screen is displayed.
The screen can be shifted to different orientations to best fit a specific install.

3– **WiFi:** View WiFi network information and signal strength.

4– **Screen Brightness:** View and edit touchscreen brightness.

5– **Relays:** View and edit your current pump relay device settings.
Refer to *Relay Settings, page 12*.
Note: This option will only display if the optional Relay Control Board (P/N 356365z) is installed.

6– **Alert History:** View a list of alerts or faults recorded by the drive.

7– **Priming Parameters:** View and edit your pump's priming settings.
Refer to *Priming Parameters, page 12*.

8– **Limits Parameters:** View and edit your pump's speed, flow and pressure limits.
Refer to *Limits Parameters, page 13*.

9– **Thermal Mode:** View and edit the your pump's Thermal Mode temperature set point and speed/flow settings.

10- **Automation Configuration:** View and edit the pump address associated with your automation system. **The pump address entered on this screen must match the address in the automation system. If addresses do not match, the pump can not communicate with an automation system.**

11- **Ramping Speed:** Set how quickly your pump will ramp up or down on startup or when changing speeds/flows.
Ramping Speed can be set to FAST, MEDIUM or SLOW.

12- **Languages:** Select the language you wish your touchscreen controller to display.

13- **Device Security:** Set a device lockout pin.

14- **Date and Time:** Set the current day and time.

15- **Device Resets:** Reset pump settings to their factory defaults. Refer to *Default Settings, page 8*.

Relay Settings

Pump Dashboard > Device Settings > Relays

The following functionality is only available if the Pentair Relay Control Board (P/N 356365z -- sold separately) has been installed on your pump.

The relay board includes two high-voltage terminals capable of controlling pool lights, salt chlorine generators, booster pumps or other filtration system components. One terminal is intended for 5A max low-current connections and the other for 16A max high-current connections.

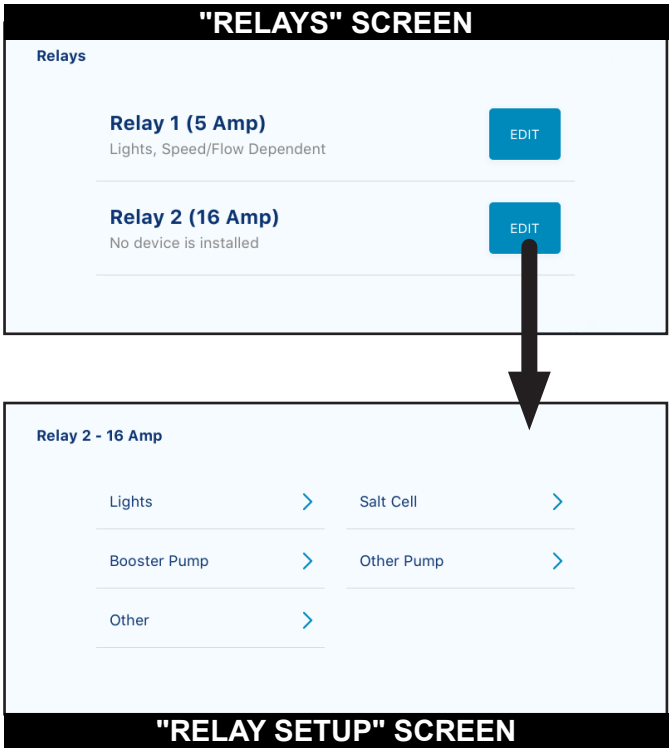

Tap EDIT to view and edit your connected devices:

1– **Device Type:** Select the device connected to a particular relay.
   - **RELAY 1 Options:** Lights, Salt Cell or Other
   - **RELAY 2 Options:** Lights, Salt Cell, Booster Pump or Other

   Note: If a relay is designated "Booster Pump", the pump will first ensure the Booster Pump has water by delaying power to the relay until the pump has run for two minutes.
   If the pump is already running a program then there will be no delay.

2– **Device Nickname:** Enter the name you want your device to display on Program Setup screens.

3– **Speed/Flow Dependent:** Check this box to ensure the relay is only activated when the pump is running.

Priming Parameters

Pump Dashboard > Device Settings > Priming Parameters

All priming settings can be edited and set from this screen.

Tap EDIT to view and edit the following priming settings:

1– **Enabled/Disabled:** ENABLED allows the pump to detect whether or not the system is properly primed for pump startup.
   If prime is not detected the pump will enter a priming cycle, based on the settings below.

2– **Priming Speed:** Set the speed the pump will run during a priming cycle.

3– **Max Priming Duration:** Set the maximum amount of time the pump will attempt to prime.
   If the pump does not achieve prime during this time a priming error will display and the pump will stop.

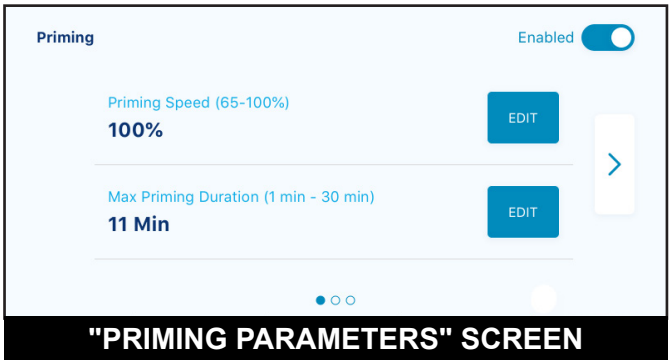

4– **Priming Range:** Set the sensitivity of pump prime detection.
   Lower settings require higher flow to detect a successful prime.

5– **Priming Delay:** Set the amount of time the pump remains at priming speed before transitioning to the selected program.

6– **Loss of Prime:** ENABLED allows the pump to detect low-flow or no-flow situations while running.
   If a loss of prime is detected the pump will pause and attempt to prime, based on the settings above. If priming is successful the pump will continue programmed operation.

Limits Parameters

Pump Dashboard > Device Settings > Limits Parameters

Set and edit pump speed, flow and pressure limits. These settings will ensure your pump does not operate outside of the programmed parameters.

Tap EDIT to view and edit the following speed, flow and pressure limits:

1– **Minimum/Maximum Speed:** Set the absolute minimum and maximum speeds the pump will be allowed to run. Pump run speed will never run under or over these two settings.

2– **Minimum/Maximum Flow:** Set the absolute minimum and maximum flow rate the pump will be allowed. Pump GPM will never fall under or exceed these two settings.

Note: These minimum and maximum flow rates only apply to Flow Programs. To apply these settings to Speed Programs as well, the next setting (Flow Limit - Speed Programs) must be enabled.

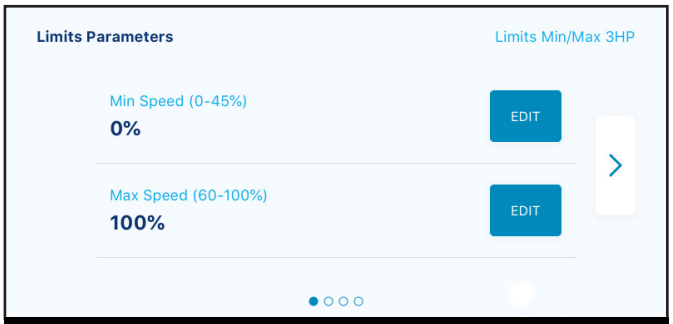

"LIMITS PARAMETERS" SCREEN

3– **Flow Limit (Speed Programs):** Enable or disable minimum and maximum flow rate limits for Speed Programs.

4– **Max Pressure:** Set the maximum system pressure the pump will be allowed to produce. The pump system pressure will never exceed this setting.

Note: The maximum pressure setting only applies to Flow Programs. To apply these settings to Speed Programs as well, the next setting (Pressure Limit - Speed Programs) must be enabled.

5– **Pressure Limit (Speed Programs):** Enable or disable maximum system pressure limit for Speed Programs.

Touchscreen Menu Tree

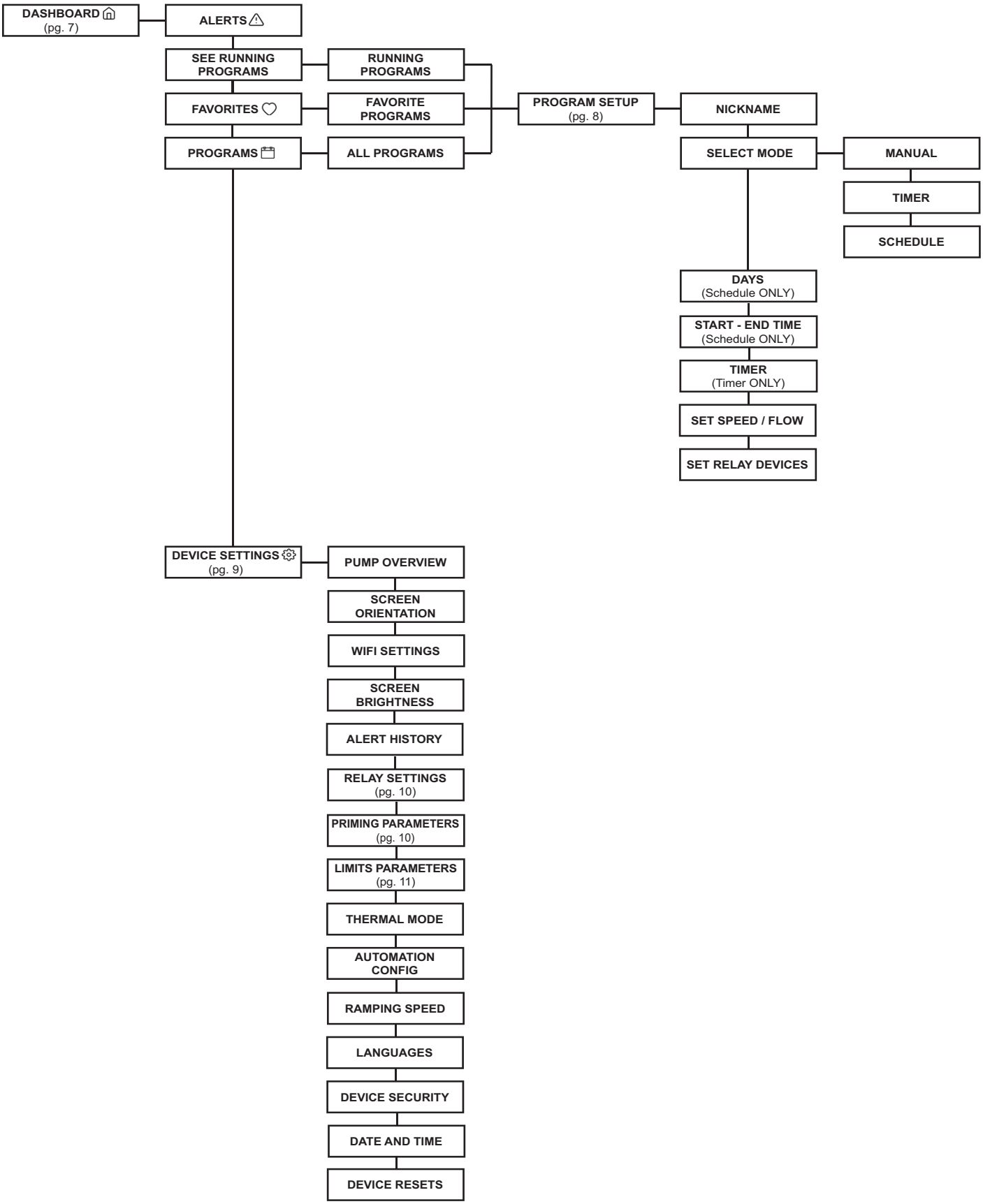

MAINTENANCE

⚠WARNING Always disconnect power to the pump at the circuit breaker and relieve pressure in the filtration system before servicing the pump. Failure to do so could result in death or serious injury due to electric shock. Do NOT attempt to service without consulting a qualified professional.

⚠WARNING Do NOT open the pump strainer pot if pump fails to prime or if pump has been operating without water in the strainer pot. Pumps operated in these circumstances may experience a build up of vapor pressure and may contain scalding hot water. In order to avoid possible personal injury, ensure the suction and return valves are open and strainer pot temperature is cool to touch, then open with extreme caution.

NOTICE To prevent damage to the pump and proper operation of the system, clean pump strainer and skimmer baskets regularly.

Cleaning the Pump Strainer Basket

The strainer pot is located at the front of the pump and houses the pump strainer basket.

The strainer basket should be checked at least once a week. Regularly emptying and cleaning the strainer basket will help ensure efficient operation and prevent unnecessary stress on the pump motor.

TO CLEAN THE STRAINER BASKET:

1. **Press ON/STOP to stop the pump and disconnect all power to the pump at the circuit breaker.**
2. **Open the filter's air relief valve and stand clear of the filter until all pressure has been relieved and the pressure gauge reads 0 (zero) psi.**
3. Turn the strainer pot lid counter-clockwise and remove it from the pump.
4. Remove the strainer basket and rinse out all debris. Replace the basket if damaged.
5. Place the strainer basket back into the strainer pot. Ensure the opening in the front of the strainer basket is aligned with the suction port.
6. Fill the strainer pot with water up to the suction port.
7. Clean the lid O-ring and sealing surface of the strainer pot.
8. Place the lid onto the strainer pot and tighten clockwise until the lid handles are perpendicular to the suction port.

   Note: Ensure the lid O-ring is properly positioned between the lid and strainer pot.
9. Open the filter air relief valve and stand clear of the filter.
10. Reconnect power to the pump at the circuit breaker and press ON/STOP to start the pump.
11. When a steady stream of water flows from the filter air relief valve, close the valve.

⚠WARNING **TRAPPED AIR CAN LAUNCH SYSTEM COMPONENTS WITH DEADLY FORCE!** When any part of the filtration system is serviced, air can enter the system and become trapped. Trapped air can cause system components to violently separate, and could result in death, serious injury, and/or property damage.

Winterizing

NOTICE Do NOT rely solely on Thermal Mode to protect your filtration system from freezing temperatures. Thermal Mode is based on the internal drive temperature and may not reflect actual air temperature.

If freezing conditions are expected, take the following steps to reduce the risk of freeze damage.

In mild climate areas, when temporary freezing conditions may occur, run your filtering equipment all night to prevent freezing.

TO PREVENT FREEZE DAMAGE:

1. **Press ON/STOP to stop the pump and disconnect all power at the circuit breaker.**
2. **Open the filter's air relief valve and stand clear of the filter until all pressure has been relieved and the pressure gauge reads 0 (zero) psi.**
3. Remove both drain plugs from the bottom of the strainer pot and drain the pump. Store the plugs in the strainer basket.
4. Cover the motor to protect it from severe rain, snow, and ice.

   Note: Do not wrap motor with plastic or other air tight materials during storage. Never cover the motor when operating or expecting operation.

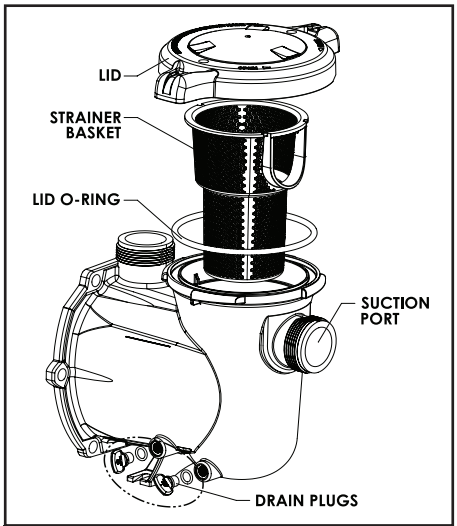

STRAINER POT ASSEMBLY

SERVICING

⚠WARNING Always disconnect power to the pump at the circuit breaker before servicing the pump. Failure to do so could result in death or serious injury to serviceman, pool users or others due to electric shock. Do NOT attempt to adjust or service without consulting your dealer or a qualified pool technician. Read the entire Installation and Maintenance Guide before attempting to use, service, or adjust the pool filtering system or heater.

⚠WARNING Do NOT open the pump strainer pot if pump fails to prime or if pump has been operating without water in the strainer pot. Pumps operated in these circumstances may experience a build up of vapor pressure and may contain scalding hot water. Opening the pump may cause serious personal injury. In order to avoid the possibility of personal injury, ensure the suction and return valves are open and strainer pot temperature is cool to touch, then open with extreme caution.

⚠CAUTION Be sure not to scratch or mar the polished shaft seal faces; seal will leak if faces are damaged. The polished and lapped faces of the seal could be damaged if not handled with care.

Motor and Drive Care

Protect from heat

1. Shade the motor from the sun.
2. Any enclosure must be well ventilated to prevent overheating.
3. Provide ample cross ventilation.
4. Maintain a minimum clearance of 3-inches (7.6 cm) behind the motor fan to allow proper circulation and pump maintenance.

Protect against dirt and chemicals

1. Protect from any foreign matter.
2. Do not store (or spill) chemicals on or near the motor.
3. Avoid sweeping or stirring up dust near the motor while it is operating.
4. If a motor has been damaged by dirt it may void the motor warranty.
5. Periodically check for debris under the motor shrouds and clean it out. Refer to *Disassembly, page 17*.

Protect against moisture

1. Protect from continuous splashing or continuous sprayed water.
2. Protect from extreme weather such as flooding.
3. If motor internals have become wet - let it dry before operating. Do not allow the pump to operate if it has been flooded.
4. If a motor has been damaged by water it may void the motor warranty.
5. If the optional drive-mounted touchscreen is installed, ensure the cover is closed when not in use.

Disassembly

TOOLS REQUIRED:

- Socket Wrench and 9/16-inch Socket
- 1/4-inch Hex-head Wrench
- No. 2 Phillips-head Screwdriver

TO DISASSEMBLE THE PUMP:

1. **Press ON/STOP to stop the pump and disconnect all power to the pump at the circuit breaker.**
2. Close all valves in suction and return lines.
3. **Open the filter's air relief valve and stand clear of the filter until all pressure has been relieved and the pressure gauge reads 0 (zero) psi.**
4. Remove both Drain Plugs from the Strainer Pot and drain the pump.
5. Using a 9/16-inch wrench, remove the six or eight Strainer Pot Bolts securing the Strainer Pot to the Motor/Hydraulic Assembly.
6. Gently separate the Motor/Hydraulic Assembly from the Strainer Pot.
7. Remove the two or three Phillips-head Diffuser Screws. Remove the Diffuser from the Motor/ Hydraulic assembly.
8. At the rear of the motor, insert a 1/4-inch hex-head driver into the hole in the middle of the motor fan cover.
9. While holding the motor shaft in place with the 1/4-inch driver, remove the Impeller by rotating it counter-clockwise.
10. Loosen the two captive Phillips-head Wiring Cover Screws. Remove the Wiring Cover from the drive.
11. Disconnect main power wiring from the drive.

    Note: If the optional Relay Control Board (P/N 356365z) is installed, remove the automation terminal blocks from relay board and disconnect any relay connections.
12. Remove the four Phillips-head Drive Cover Screws. Remove the Drive Cover from the drive.
13. Remove the four Phillips-head Drive-to-Motor Screws.
14. Gently separate the drive from the motor and place it aside.
15. Disconnect the bonding wire from the bonding lug.
16. Remove two Phillips-head Shroud Screws on each side of the motor and remove both halves of the Motor Shroud from the motor.
17. Using a 9/16-inch wrench, remove the four Motor Bolts securing the Seal Plate to the motor.
18. Remove the Spring Seal from the motor shaft and place it aside.
19. If replacing the Shaft Seal, place the Seal Plate face down and tap out the white Ceramic Seal.

Reassembly

1. If installing a new Shaft Seal:

    ⚠CAUTION Scratching, marring or otherwise damaging the polished shaft seal faces will cause the seal to leak. Always handle the shaft seal faces with care and clean them thoroughly before reassembling the pump.

    a. Clean the seal plate's seal cavity and the motor shaft using mild detergent and water.
    b. Lubricate the black rubber portion of the ceramic seal with water.
    c. With the white ceramic face outwards, press the seal into the seal plate with your thumbs.
4. Reinstall the seal plate onto the motor.
5. Reinstall both halves of the Motor Shroud onto the motor.
6. Using a clean cloth, remove any debris from the face of the Ceramic Seal.
7. With the flat metal face outwards, place the Spring Seal onto the motor shaft. The carbon face should seat against the Ceramic Seal.
8. While holding the motor shaft in place with a 1/4-inch driver, reinstall the impeller onto the motor shaft.
9. Reinstall the Diffuser onto the Seal Plate.
10. Ensure the gasket is properly seated onto the drive connector and reinstall the drive onto the motor.
11. Reconnect the main power and bonding lines to the pump.

    Note: If the optional Relay Control Board (P/N 356365z) is used, reinstall the automation terminal blocks onto the relay board and reconnect any relay connections.
12. Reinstall the Drive Cover onto the drive.
13. Reinstall the Wiring Cover onto the drive.
14. Ensure the Diffuser and Seal Plate O-rings are clean and seated properly.
15. Reinstall the hydraulic assembly to the Strainer Pot, tightening the bolts in a criss-cross pattern.
16. Reinstall the drain plugs into the strainer pot.
17. Reprime the pump according to *Priming the Pump, page 7.*

Pump Disassembly/Reassembly Diagram

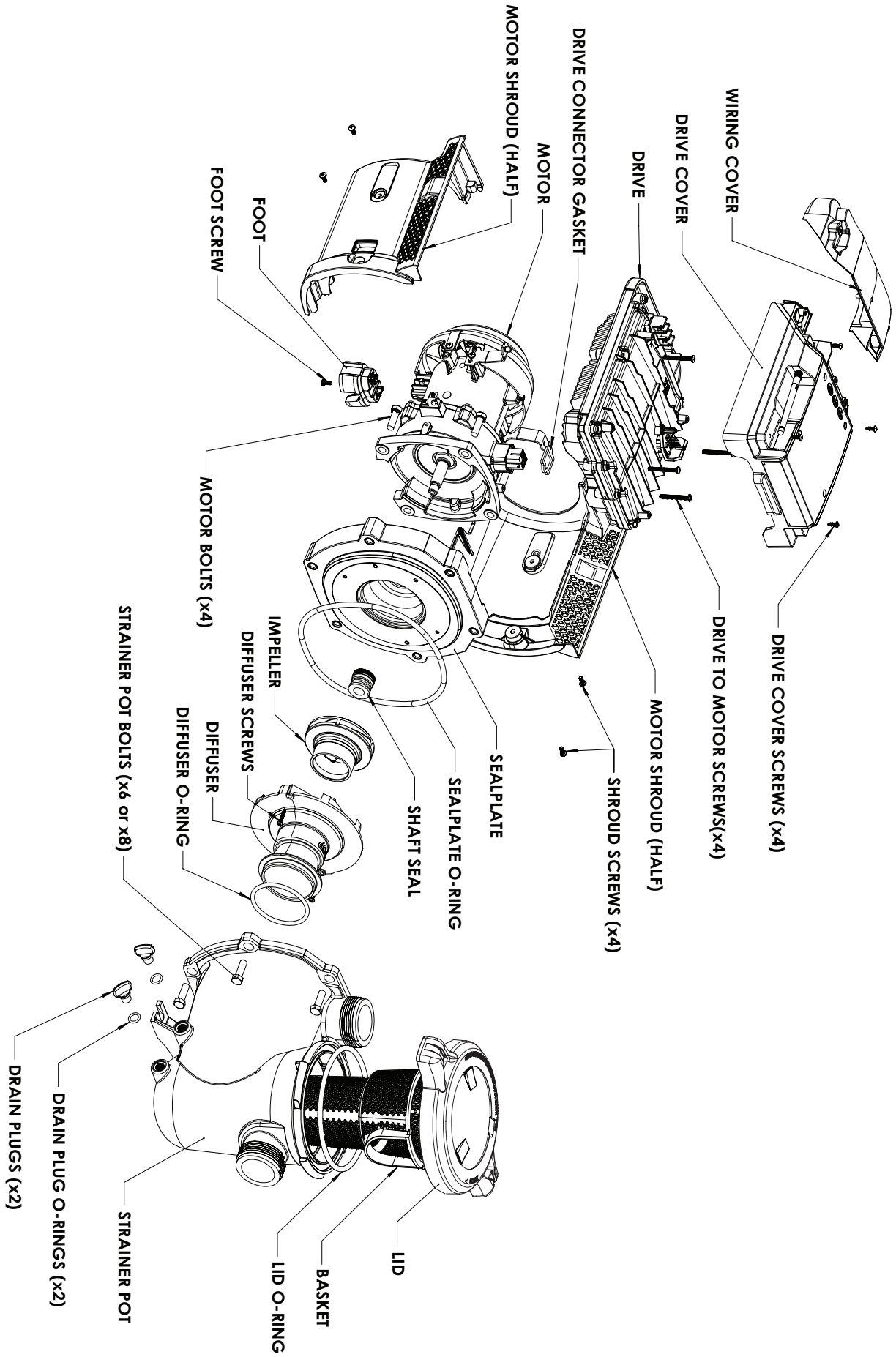

Drive Removal and Installation

⚠WARNING To avoid dangerous or fatal electrical shock hazard, switch OFF power to motor before working on pump or motor.

⚠WARNING **FIRE AND BURN HAZARD.** The pump motor may run at high temperatures. To reduce the risk of fire, do NOT allow leaves, debris, or foreign matter to collect around the pump motor. To avoid burns when handling the motor, shut off the motor and allow it to cool for 20 minutes before servicing. The pump provides an automatic internal cutoff switch to protect the motor from heat damage during operation.

⚠CAUTION To avoid electrical hazard, do NOT remove the four torx-head screws from the drive.

TO DISASSEMBLE AND REMOVE THE DRIVE:

1. **Press ON/STOP to stop the pump and disconnect all power to the pump at the circuit breaker.**
2. Loosen the two captive Phillips-head Wiring Cover Screws. Remove the Wiring Cover from the Drive.
3. Disconnect main power wiring and remove the Automation Terminal Blocks from the drive.
4. Remove the four Phillips-head Drive Cover Screws. Remove the Drive Cover from the Drive.
5. Remove the four Phillips-head Drive-to-Motor Screws.
6. Gently separate the Drive from the Motor/ Hydraulic Assembly and place it aside.

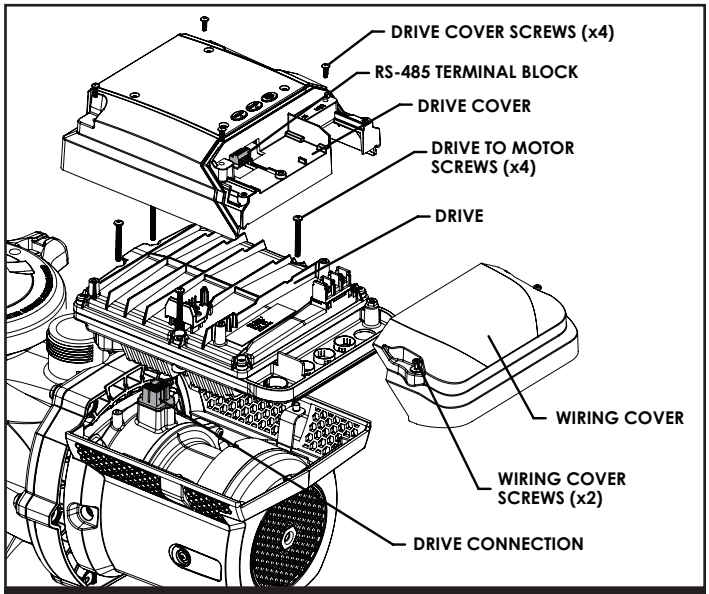

DRIVE COMPONENTS

TO INSTALL THE DRIVE:

1. Ensure the drive connection gasket is not damaged and is in place.

   Do not reassemble with a damaged or missing gasket. Replace the gasket if damaged.
2. Align the Drive with the Drive Connection and seat the drive onto the motor.
3. Secure the Drive to the motor with the four Drive to Motor Screws.
4. Reinstall the Drive Cover and secure it with the four Drive Cover Screws.
5. Rewire automation and power cables that were disconnected during drive removal. Refer to *Electrical Installation, page 4* and *Connecting to an Automation System, page 5*.
6. Reinstall the Wiring Cover and secure it with the two Wiring Cover Screws.

Relocating the WiFi Antenna

The pump communicates wirelessly via a *Bluetooth*® Wireless Technology connection with your personal device, or a 2.4ghz WiFi connection with your home router.

The drive's WiFi antenna features a male SMA bulkhead connector on the outside of the top cover and can be removed by loosening the antenna connector.

An SMA extension cable can be used to remotely mount the antenna in an area where it can receive a better signal.

An extension cable is only recommended in order to relocate the antenna to a more favourable location; such as outside of a masonry enclosure or around the corner of a building. In most other cases using an extension cable will harm the signal.

TROUBLESHOOTING

WARNING Always disconnect power to the pump at the circuit breaker and relieve pressure in the filtration system before servicing the pump. Failure to do so could result in death or serious injury to serviceman, pool users or others due to electric shock. Do NOT attempt to adjust or service without consulting your dealer or a qualified pool technician. Read the entire Installation and Maintenance Guide before attempting to use, service, or adjust the pool filtering system or heater.

Drive LED Indicators

Each button on the drive; CONNECT, ON/STOP and QUICK CLEAN features an LED indicator.

Refer to the table to the right for a list of LED behaviors and what they indicate.

= Solid LED

= Blinking LED

= Pulsing LED

LED	BEHAVIOR		INDICATES
CONNECT	Green	Pulsing	Searching for WiFi connection
		Solid	Active WiFi connection
	Blue	Blinking	Searching for *Bluetooth*® connection
		Solid	Active *Bluetooth*® connection
	Yellow	Pulsing	Pump requires provisioning
		Blinking	Pump update in progress
	Magenta/Pink	Solid	Automated control is active
		Pulsing	Connected to automation and in service mode
ON/STOP	Green	Solid	Pump running
		Blinking	Priming cycle
		Pulsing	Pump in Thermal Mode
	Red	Solid	Pump disabled
		Blinking	Alarm detected
	Green/Yellow	Blinking	Warning detected
	Yellow	Solid	Pump is idle

Troubleshooting Chart

PROBLEM	POSSIBLE CAUSE	CORRECTIVE ACTION
Connection Issue - Pump is Offline Alert	Pump is not receiving power	Ensure the pump is receiving power. If the pump is receiving power, the ON/STOP button will illuminate.
	Home internet service is out or inaccessible	Confirm that the home router is active and connected to the internet.
	Intermittent WiFi or network connection	1. Restart the home router. This can clear up many typical home networking issues. 2. Cycle power to the pump. Disconnect power to the pump at the main breaker, Wait for 1 minute and reconnect power. 3. Check the signal strength in WiFi Settings of the Pentair Pool app. If the signal strength is insufficient, refer to the Poor WiFi Signal section of this troubleshooting chart.
	Bluetooth® connectivity issues	1. Stand closer to the pump when operating via *Bluetooth*®. 2. Restart the Pentair Pool app. 3. Adjust the pump antenna. 4. Ensure smartphone permissions are given to the pump.

- Troubleshooting Continues on the Next Page -

Troubleshooting Chart (continued)

PROBLEM	POSSIBLE CAUSE	CORRECTIVE ACTION
Connection Issue - Pump is Offline Alert	Poor WiFi signal to router	1. The WiFi antenna can be relocated from the top cover of the drive to a location with better WiFi signal. The antenna bulkhead on the cover has a SMA Female connector, and the antenna has a SMA Male connector. A SMA extension cable can be used to move the antenna to a more favorable location such as around the corner of a wall or outside of an enclosure. 2. Consider operating the pump in *Bluetooth®* Wireless Technology control mode. Refer to the *Pentair Pool User's Guide (P/N 356088)* for instructions.
Priming Issue	Air leak in suction	1. Check suction piping and suction valve seals. 2. Check pool water level and ensure the skimmer is not drawing in air. 3. Check and clean the pump strainer pot lid O-ring.
	Not enough water in strainer pot	Fill the strainer pot up to the suction port with water.
	Priming speed or range too low	Adjust priming parameters/settings (speed, duration, delay, priming range) until the pump consistently primes. • If using a touchscreen controller, refer to *Priming Parameters* on page 12 for instructions. • If using the Pentair Pool app, refer to the *Pentair Home User's Guide (P/N 356088)* for instructions.
	Priming alerts	Refer to *Alarms and Warnings* on page 23 for information regarding specific alarms.
Reduced Capacity and/or Head	Clogged pump strainer basket	Clean the pump strainer basket. Refer to *Cleaning the Pump Strainer Basket on page 15* for instructions.
	Air pockets or leaks in suction line	Inspect all piping and seals in the suction line.
	Clogged impeller	Disassemble the pump and remove debris from the impeller. Refer to *Disassembly* on page 17 and *Reassembly* on page 17 for instructions.
	Pump not running required speed	Check the pump drive interface and/or Pentair Pool for alerts or warnings. Refer to *Alarms and Warnings* on page 23 for information regarding specific alarms.
Pump Runs then Stops	Over temperature FAULT	Ensure the fan guard is clean. Use compressed air to remover any dirt, debris or blockages.
	Over current FAULT	Disassemble the pump and check rotating parts for blockages or debris build-up. Clean if necessary. Refer to *Disassembly* on page 17 and *Reassembly* on page 17 for instructions. The pump will automatically attempt to restart after 1 minute.
Pump Increases Speed During Pool Cleaner Operation	Constant FLOW program is running	Schedule a constant SPEED Program to run during expected cleaning cycles.

- Troubleshooting Continues on the Next Page -

Troubleshooting Chart (continued)

PROBLEM	POSSIBLE CAUSE	CORRECTIVE ACTION
Pump is Noisy or Operating Loudly	Debris in contact with cooling fan	Ensure the fan guard is clean. Use compressed air to remove any dirt, debris or blockages.
	Clogged impeller	Disassemble the pump and remove debris from the impeller. Refer to *Disassembly* and *Reassembly* on page 17 for instructions.
	Too much debris in strainer basket causing cavitation	Clean the pump strainer basket. Refer to *Cleaning the Pump Strainer Basket on page 15* for instructions.
	Motor speed too high	Consider reducing the speed if possible.
Pump is Leaking *(from Strainer Pot - Seal Plate Joint)*		1. Ensure the seal plate O-ring is not pinched between the seal plate and strainer pot. 2. Tighten the bolts joining the strainer pot and the seal plate. 3. If leak persists, disassemble the pump. Inspect all O-rings and seals for damage or debris build-up. Replace or clean the seals if necessary. Refer to *Disassembly* and *Reassembly* on page 17 for instructions.
Pump is Leaking *(from Strainer Pot Lid)*		1. Ensure the strainer pot lid is installed correctly (lid handles are perpendicular to the suction port) and is compressing the strainer pot lid O-ring. 2. Refer to *Cleaning the Pump Strainer Basket on page 15* and remove the strainer pot lid. Inspect the strainer pot lid O-ring for damage or debris build-up. Replace or clean the O-ring if necessary.
Pump is Leaking *(from Underneath Motor)*		Disassemble the pump and inspect the shaft seal. The shaft seal is a wearable part and will need to be replaced after prolonged operation. Refer to *Disassembly* and *Reassembly* on page 17 for instructions.

Alarms and Warnings

When an Alarm is triggered the drive's ON/STOP LED will blink RED and a fault code will display. The pump will stop until the alarm is resolved.

When a Warning is triggered the drive's ON/STOP LED will blink GREEN/YELLOW and a fault coded will display.

Depending on your particular setup, fault codes will display on one or more of the user interfaces:

- Pentair Pool app
- Automation System Interface
- Optional Touchscreen Controller (Almond - P/N 356159z, Black - P/N 356348z)

ALARM / WARNING	DESCRIPTION	DEFINITION
Weak WiFi Connection	Weak WiFi connection detected.	Pump antenna may be obstructed or too far away from your router. The antenna wire can be extended. Refer to *Relocating the WiFi Antenna* on page 19.
Offline	The pump is offline.	The Pentair cloud cannot connect to your pump. This could be caused by a power outage at the pump or router, or a loss of WiFi signal to the pump.
Priming Failure	The pump has reported a Priming Failure Alarm.	Priming failure can be caused by lack of water in the volute strainer basket.
Overheat	The pump has reported an Overheat Condition.	The pump motor has detected an abnormally high internal temperature. This can be caused by a blockage of the cooling fan inlet or outlet, or by excessively high ambient air temperature. The pump will attempt to protect itself by reducing the motor speed to give the motor and drive a chance to cool down.
Over Current	The pump has reported an Over Current Condition.	Load has increased on the motor; due to debris, part interference, temperature issues, age of parts, or supplied voltage. Refer to *Disassembly* on page 17 and inspect the rotating parts of the pump for blockages or debris buildup.
Over Voltage	The pump has reported an Over Voltage Alarm.	Supplied voltage is outside of the proper range. When voltage returns to the normal the alert will clear and the pump will resume operation.
Under Voltage	The pump has reported an Under Voltage Alarm.	Supplied voltage is outside of the proper range. When voltage returns to the normal the alert will clear and the pump will resume operation.
Speed Limit	The pump has reported a Speed Limit Warning.	The pump is operating at the programmed maximum speed in order to achieve the desired speed/flow. Refer to *Limits Parameters* on page 13 for instructions on adjusting the Speed Limit. If this alert displays and the Speed Limit is already set to 100%, then the pump may not be capable of achieving the desired flow rate.
Pressure Limit	The pump has reported a Pressure Limit Warning.	The pump is operating at the programmed maximum system pressure. The pump monitors Total Dynamic Head, and not outlet pressure, so it may differ from the reading on the filter gauge. Refer to *Limits Parameters* on page 13 for instructions on adjusting the pump Pressure Limit.
Flow Limit	The pump has reported a Flow Limit Warning.	The pump is operating at the programmed maximum flow rate. Refer to *Limits Parameters* on page 13 for instructions on adjusting the pump Flow Limit.
Internal Fault	The pump has an internal error.	This alert can be caused by a few different types of internal hardware or software errors in the drive. Disconnect power to the pump and reconnect after one minute. If the alert remains, contact a qualified pool professional.
Drive is Derating (Warning)	The pump is slowing down to prevent the drive from overheating.	This alert usually accompanies an Overheat or Over Current alert. It is intended to note that the pump will continue to operate at a reduced speed as long as possible. After the drive has cooled enough it will automatically resume normal operation.
Derating Alarm - Exceeded & Cut Off	The pump has stopped to prevent the drive from overheating.	The motor and drive are not able to reduce speed enough to protect themselves. The motor will stop and Pentair Pool app will display this alarm. When the drive has cooled enough, it will automatically resume operation and attempt to run the requested program.
Thermal Mode	The pump operating in Thermal Mode.	The pump is operating in Thermal mode. Thermal Mode is controlled by the drive's internal temperature, not water temperature. **This is intended to keep motor components from freezing, but should not be solely relied on for full filtration system freeze protection.**

REPLACEMENT PARTS

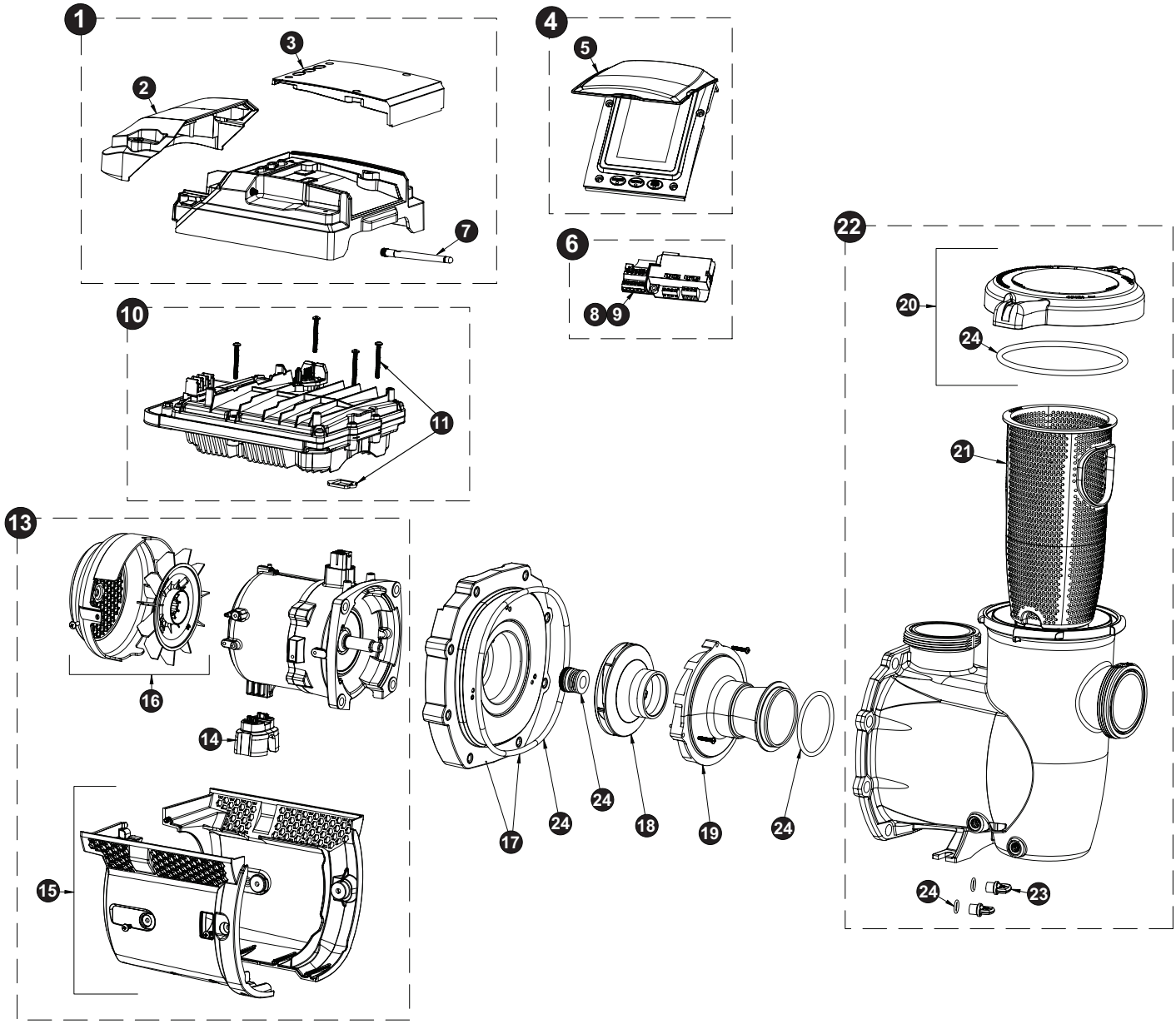

Pump Parts List (1.5 HP Models)

Item	Description	Almond	Black
1	Drive Cover Assembly	356214z	356349z
2	Wiring Compartment Cover	356096Z	356337z
3	Blank Controller Kit	356101z	356338z
4	Touchscreen Controller Kit	356159z	356348z
5	Touchscreen Lid	356099z	356339z
6	Relay Board Kit	356365z	
7	Antenna	356226z	
8	4-Pin Connector, RS-485	8023304	
9	6-Pin Connector, Relay Control Board	8023306	
10	Drive and Drive Hardware Kit	356162z	
11	Drive Hardware Kit	357865	
13	Motor Kit	356164s	
14	Motor Foot Kit	356149z	356341z
15	Motor Shroud Kit	357867	357868
16	Motor Fan Kit	356232z	
17	Seal Plate and O-Ring	356090z	356333z
18	Impeller	356176z	
19	Diffuser	356155z	
20	Strainer Pot Lid	356172z	356368z
21	Strainer Basket	074162z	
22	Strainer Pot Assembly	356174z	356346z
23	Drain Plug	071131z	357161z
24*	Seal Kit*	357871	
-	Union Kit	351157	
-	Union O-ring	6020018	
-	Riser Plate Kit - Thin (A/B Base)	357833z	
-	Riser Plate Kit - Thick (C Base)	357831z	
-	Riser Plate Kit - Both	357832z	

(*) Seal Kit includes shaft seal, seal plate O-ring, diffuser O-ring, strainer pot lid O-ring, and drain plug O-rings.

Pump Parts List (3 HP Models)

Item	Description	Almond	Black
1	Drive Cover Assembly	356214z	356349z
2	Wiring Compartment Cover	356096z	356337z
3	Blank Controller Kit	356101z	356338z
4	Touchscreen Controller Kit	356159z	356348z
5	Touchscreen Lid	356099z	356339z
6	Relay Board Kit	356365z	
7	Antenna	356226z	
8	4-Pin Connector, RS-485	8023304	
9	6-Pin Connector, Relay Control Board	8023306	
11	Drive and Drive Hardware Kit	356163z	
11	Drive Hardware Kit	357865	
13	Motor Kit	356165s	
14	Motor Foot Kit	356149z	356341z
15	Motor Shroud Kit	357869	357870
16	Motor Fan Kit	357866z	
17	Seal Plate Kit	356091z	356345z
18	Impeller	356177z	
19	Diffuser	356156z	
20	Strainer Pot Lid	356172z	356368z
21	Strainer Basket	400007z	
22	Strainer Pot Assembly	356175z	356347z
23	Drain Plug	071131z	357161z
24*	Seal Kit*	357872	
-	2" / 2.5" Union Kit	410028	
-	3" Union Kit	410029	
-	Union O-ring - Diamond Seal	410016z	
-	Riser Plate Kit - Thin (A/B Base)	357833z	

(*) Seal Kit includes shaft seal, seal plate O-ring, diffuser O-ring, strainer pot lid O-ring, and drain plug O-rings.

TECHNICAL DATA

Technical Specifications (1.5 HP Models)

Input Voltage Nominal	115/208-230 VAC
Input Current	12.0/6.4-5.9 Amps
Input Frequency	1PH, L1-L2 or L-N, 50 or 60 Hz
Max Input Watts	1350 W
Max Shaft Horsepower	1.5 HP
Speed Range	400 - 4000 RPM

Environmental Enclosure Rating	NEMA Type 3 / IPX5
Ambient Condition Range	
Storage	-40°C to +60°C (-40°F to 140°F)
Operating	0-50°C (32-122°F)
Humidity	Relative 0-95% Non-Condensing

Pump Dimensions (1.5 HP Models)

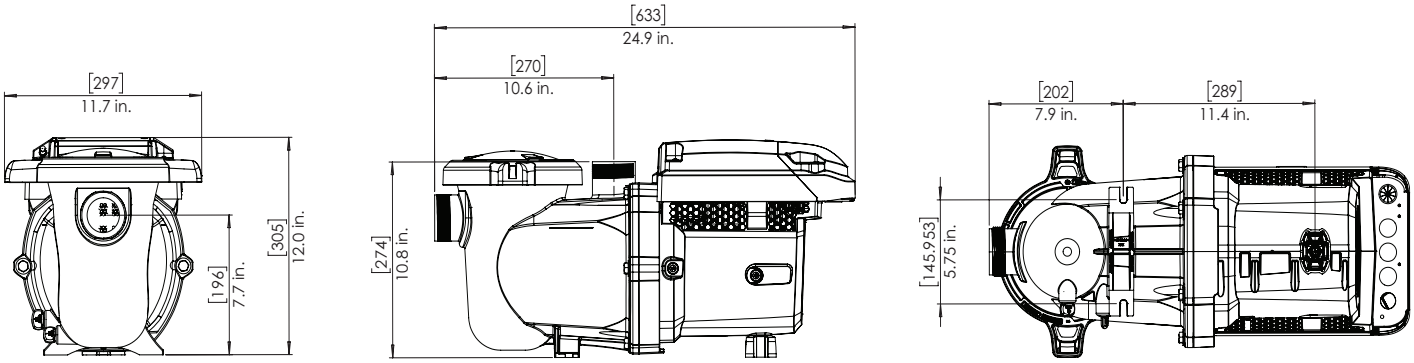

Pump Performance Curves (1.5 HP Models)

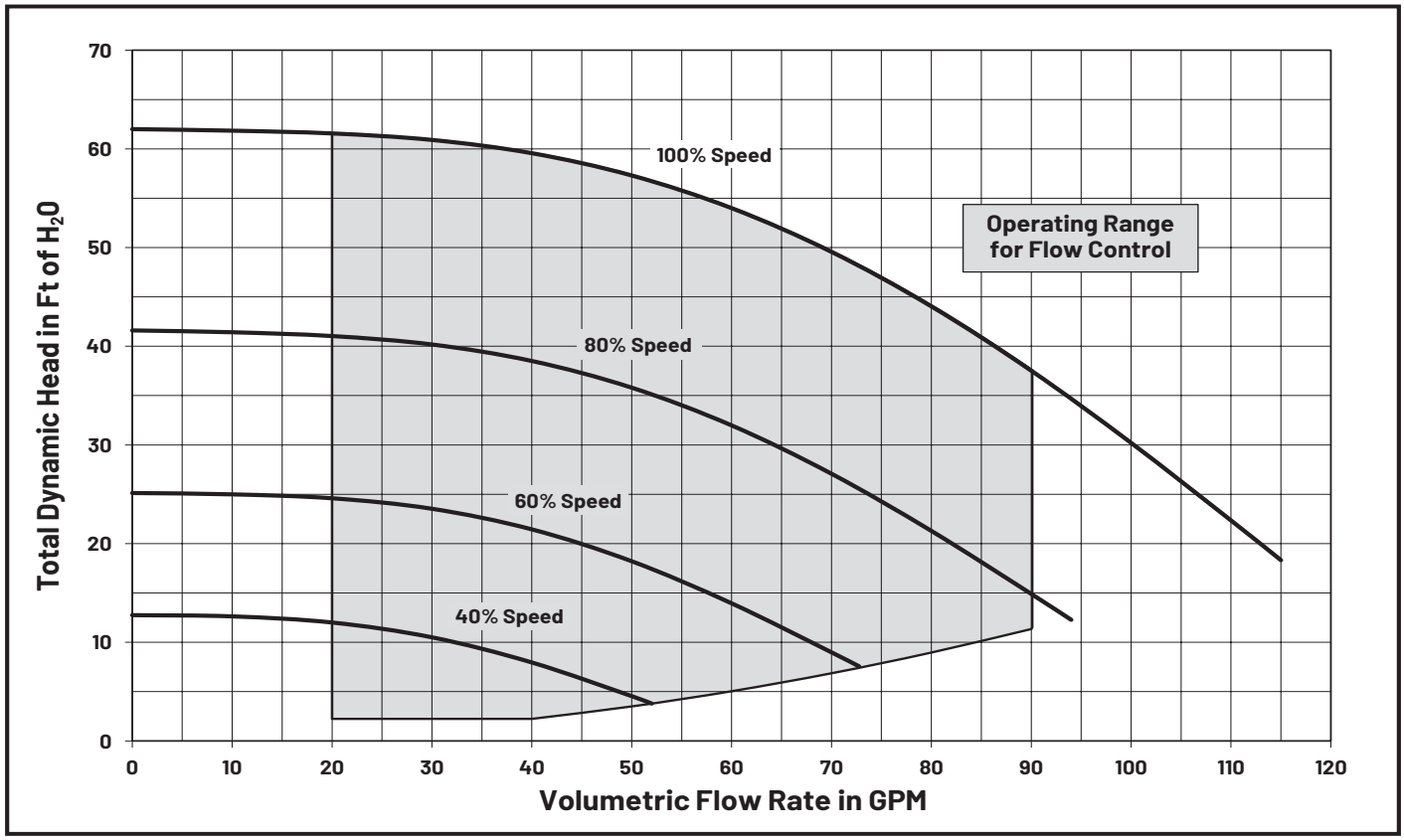

Technical Specifications (3 HP Models)

Input Voltage Nominal	208-230 VAC
Input Current	12.4-11.2 Amps
Input Frequency	1PH, L1-L2 or L-N, 50 or 60 Hz
Max Input Watts	2590 W
Max Shaft Horsepower	3.0 HP
Speed Range	450 - 3450 RPM

Environmental Enclosure Rating	NEMA Type 3 / IPX5
Ambient Condition Range	
Storage	-40°C to +60°C (-40°F to 140°F)
Operating	0-50°C (32-122°F)
Humidity	Relative 0-95% Non-Condensing

Pump Dimensions (3 HP Models)

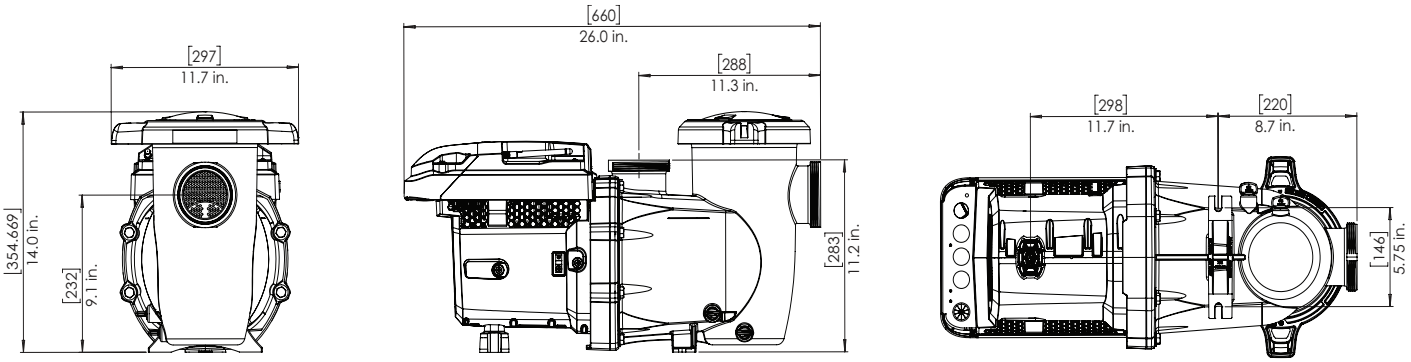

Pump Performance Curves (3 HP Models)

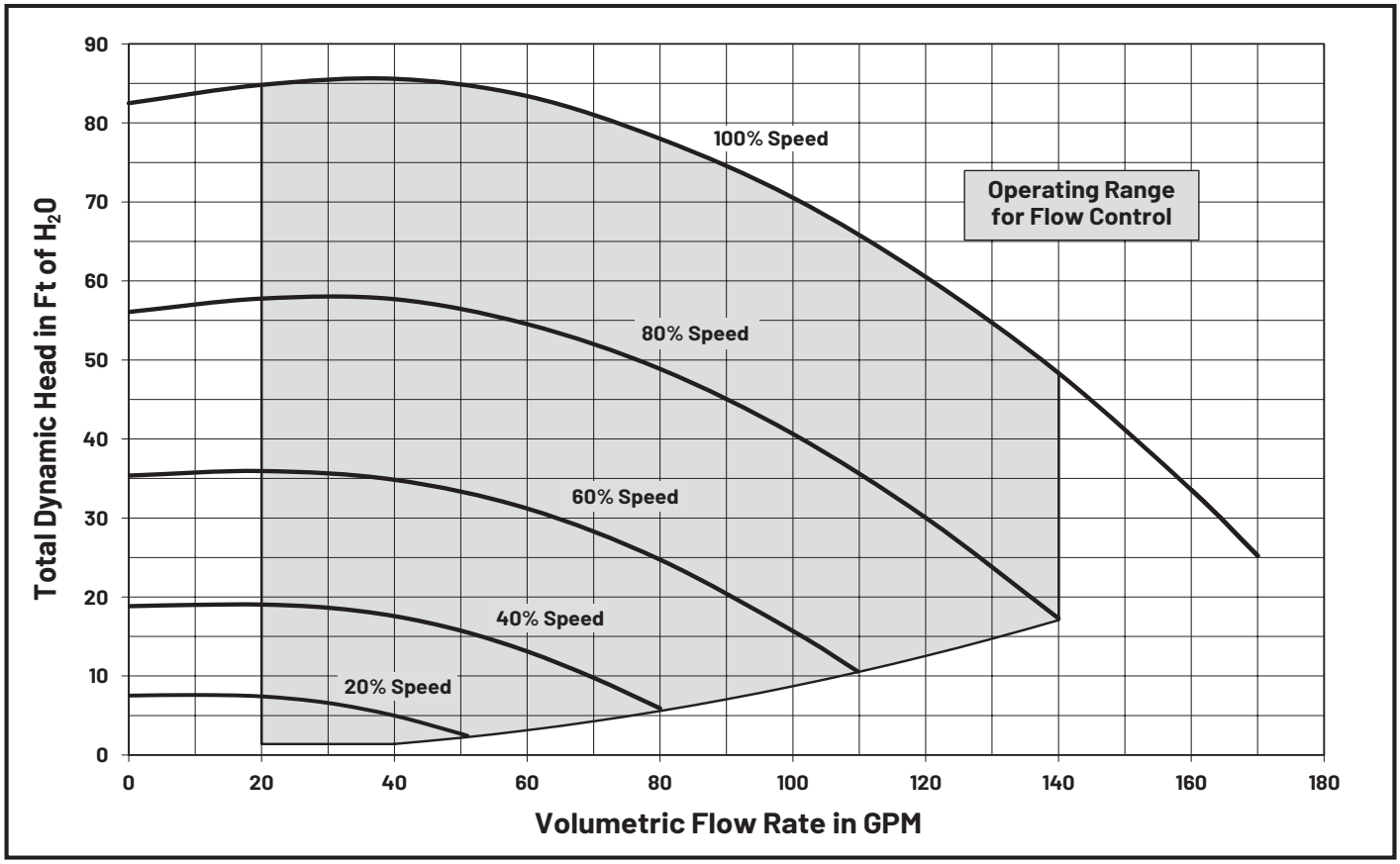

1620 HAWKINS AVE., SANFORD, NC 27330 • (919) 566-8000
10951 WEST LOS ANGELES AVE., MOORPARK, CA 93021 • (805) 553-5000

All indicated Pentair trademarks and logos are property of Pentair. Third party registered and unregistered trademarks and logos are the property of their respective owners. The *Bluetooth®* word mark and logo are registered trademarks of Bluetooth SIG, Inc. in the United States and/or other countries.

© 2026 Pentair. All rights reserved. WWW.PENTAIR.COM

P/N 356231.F 4/29/26