PENTAIR

EVERPURE® PRO
REVERSE OSMOSIS WATER FILTRATION SYSTEM

INSTALLATION AND OPERATING INSTRUCTIONS

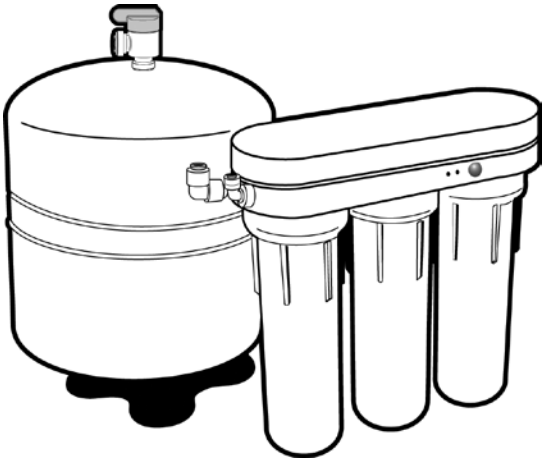

©2014 Pentair Residential Filtration, LLC

TABLE OF CONTENTS

Operating Specifications 2
System Dimensions 2
Production Capabilities 2
Tools Required 3
Precautions 3
How Reverse Osmosis Works 4
Installation 5
System Startup 11
Testing Your Reverse Osmosis System 12
Maintenance 12
Troubleshooting 14
Performance Data 16
California Proposition 65 Warning 17
Replacement Parts 18

OPERATING SPECIFICATIONS

IMPORTANT! Before installing this reverse osmosis system, make certain your water supply complies with the following operating specifications. Failure to comply may reduce the effectiveness of the system and will void the warranty. Consult your local water treatment utility or a certified water testing lab to determine the quality for your water and use the table below to record your results for future reference.

Specifications		Your Water
Pressure Range:	40–100 psi (2.7–6.9 bar)	_____
Temperature Range:	40–100°F (4.4–37.8°C)	_____
Total Dissolved Solids:	<1500 ppm	_____
Maximum Hardness †:	10gpg (171 mg/L)	_____
Sulfide, Iron and Manganese‡:	<0.01 ppm	_____
Chlorine in Water Supply:	<2 ppm	_____
Water Supply pH Limits:	4–11	_____
Turbidity:	1 NTU Max	_____
Model #		_____
Date of Purchase:		_____

†**IMPORTANT:** If the hardness of your water is above 10 gpg (171 mg/L), lime scale will build up rapidly on the membrane inside of the RO membrane cartridge. Scale buildup will plug the RO membrane cartridge and make the system ineffective. We do not recommend these reverse osmosis systems be used with water in excess of 10 gpg (171 mg/L) hardness, unless the water is softened prior to the reverse osmosis system.

‡See your local dealer or water treatment specialist to reduce these substances in your water.

NOTE: If your water pressure and temperature are at the low end of the listed range (40 psi [2.8 bar] and 40°F [4.4°C]), and the TDS level is near the maximum (1500 ppm), the system will not function properly. Under these extreme conditions, pre-warming the supply water using a 25 feet (7.62 m) coil of tubing between the supply adapter and the system, and/or installing a booster pump to increase the water pressure will allow the system to perform effectively.

⚠ WARNING: Do not use with water that is microbiologically unsafe or of unknown quality without adequate disinfection before or after the system. Systems certified for cyst reduction may be used on disinfected waters that may contain filterable cysts.

NOTE: Substances reduced are not necessarily in your water. System must be maintained according to manufacturer's instructions, including replacement of filter cartridges.

SYSTEM DIMENSIONS

System Dimensions:	13.75 inches W x 4.75 inches D x 12.75 inches H (349 mm x 121 mm x 318 mm)
System Weight:	6.1 lbs. (2.7 kg)
Tank Dimensions:	11.3 inches Dia x 16.75 inches H (287 mm x 425 mm) (with valve)
Tank Capacity:	1.9–3.2 gallons (7.2–12.1 L) (depending on water pressure)
Tank Weight (full):	40 lbs. (18.2 kg.) (depending on water pressure)

PRODUCTION CAPABILITIES

Tested by NSF International according to NSF/ANSI Standard 58 has given 5.7 gallons per day. Source water test parameters are 50 psig, 77ºF, pH of 7.5 ± 0.5 and 750 ppm total dissolved solids.

The PRO is Tested and Certified by NSF International against NSF/ANSI Standard 58 for the reduction of Total Dissolved Solids, Fluoride, Turbidity, Nitrate/Nitrite, Lead, Selenium, Pentavalent Arsenic, Copper, Cadmium, Hexavalant Chromium, Trivalent Chromium, Barium, Cysts, Radium 226/228 and NSF/ANSI Standard 42 for the reduction of chlorine taste and Odor.

NSF ANSI Standard 58 certified to reduce cysts such as Cryptosporidium and Giardia by mechanical means.

EPA Est. No 090375-MEX-001

TOOLS REQUIRED

Tools Required

- Hand or electric drill
- Screwdriver - Phillips
- (2) Adjustable wrenches
- Drill bits: 1/8-inch, 1/4-inch and 3/8-inch
- Metal file
- Safety glasses
- Utility knife or tube cutter
- Needle-nose pliers
- Measuring tape

If sink does not have hole for separate faucet:

- Center punch
- 1-1/4 inch bi-metal or carbide-tipped hole saw
- Respirator

NOTE: All tools listed will not be necessary for installation. Read installation procedures before starting to determine required tools.

PRECAUTIONS

⚠ WARNING: The PRO system contains a replaceable membrane critical to the efficiency of the system. Replacement of the reverse osmosis membrane should be with one of identical specifications, as defined by the manufacturer, to assure the same efficiency and contaminant reduction performance.

The PRO system contains a replaceable membrane, critical for the effective reduction of total dissolved solids. Product water should be tested periodically to verify that the system is working properly.

The PRO is acceptable for treatment of influent concentrations of no more than 27 mg/L nitrate and 3 mg/L nitrite in combination measured as N and is certified for nitrate/ nitrite reduction only for water supplies with a pressure of 40 psig (280 kPa) or greater.

The PRO shall only be used for arsenic reduction on chlorinated water supplies containing detectable residual free chlorine at the system inlet. Water systems using an in-line chlorinator should provide a one-minute chlorine contact time before the RO system.

The Reverse Osmosis (RO) system will not protect against disease-causing bacteria or remove naturally-occurring harmless bacteria.

CAUTION The PRO system must be protected against freezing which can cause the filter housing to crack and leak water.

Because of the product's limited service life and to prevent costly repairs or possible water damage, we strongly recommend that the filter housings be replaced every ten years. If your housing has been in use for longer than this period, it should be replaced immediately. Date the bottom of any new filter housing to recommend the next replacement date.

Do not use Plumber's Putty in the installation of this product as it may cause cracking of the filter housing threads.

NOTE:

- **Your water must be within required limits for satisfactory operation. If not, your membrane life may be shortened and your warranty will be voided (see Operating Specifications, page 1).**
- **Install on cold water line only.**
- **Make certain that installation complies with all state and local laws and regulations.**
- **The reverse osmosis membrane and replacement cartridges included with this system have limited service lives. Changes in taste, odor, and color of the filtered water indicate that the cartridge(s) and/or membrane should be replaced (see Maintenance, page 10). On the monitored model (PRO) the green light indicates optimum performance while the amber light indicates that the membrane is in need of changing.**
- **During extended periods of non-use (such as during a vacation), remove the membrane from the membrane housing and place it in a sealed plastic bag. Store membrane in refrigerator for future use. DO NOT FREEZE.**
- **If system stands for more than 2–3 days without being used, the storage tank should be emptied.**

Membrane Precautions

CAUTION Chlorine will destroy the Reverse Osmosis membrane. If you use these RO systems with a chlorinated or periodically-chlorinated water supply, it is ABSOLUTELY NECESSARY to use a carbon prefilter (included with the system). This carbon prefilter should be changed at least every 3 months to avoid chlorine breakthrough. See warranty for disclaimers and limitations that apply to the RO membrane.

NOTE: To make sure no chlorine is present in the water that reaches the membrane, use a test kit that tests free-chlorine to check the reject water that flows from the membrane to the drain. No chlorine should be detected.

HOW REVERSE OSMOSIS WORKS

The Everpure PRO uses a semi-permeable membrane to reduce dissolved salts, improving the taste and odor of your water. The RO membrane is made of multiple layers of micron-thin film wound around a hollow center core. Water molecules can pass through the membrane, while dissolved salts are rejected.

The Everpure PRO system features triple-filter action. Your household water supply is prefiltered to reduce dirt and chlorine that may foul the membrane. The RO membrane separates this prefiltered water into PRODUCT WATER and REJECT WATER. Your household water pressure forces the product water through the membrane and into the storage tank. Dissolved salts cannot pass through the membrane and are sent to the drain as reject water. When you open the RO faucet, product water is drawn from the storage tank through a post-polishing filter. The post-polishing filter takes out any remaining taste or odor in the water and provides you and your family with cleaner, great-tasting water.

The PRO system also features an auto shut-off valve, which shuts off the system once the pressure in the storage tank reaches 2/3 of the incoming water pressure (your household water pressure). When you open the faucet to draw water from the storage tank, the pressure inside the tank drops and the auto shut-off valve opens. The system then begins to operate, replenishing the water you took from the storage tank. For each gallon of water produced, 9 gallons are discharged as reject water. The storage tank can hold up to 3.2 gallons of water at a time, more than enough for the average family's drinking and cooking needs.

When used under operating conditions specified on page 2 of the manual, your Reverse Osmosis membranes should last 12–24 months.

NOTE: The PRO unit will indicate a need for a membrane change with an amber light; see LIGHT INDICATOR READINGs, page 10 for details.

The precise life span of your system's membrane will depend on the quality of the water entering the system and the frequency with which you use it. Frequent use prevents the dissolved salts from building up on the membrane as scale. The more water the system is required to produce, the longer the membrane will last. You may wish to find a variety of uses for your system in order to prolong the life of the membrane. The life of the membrane will also depend upon the regularity with which you replace the prefilter cartridge in the system.

INSTALLATION

Drinking Water Faucet
Supply Adapter
Blue
Drain Clamp
Red
Post-polishing Filter Housing
Membrane Housing
Manifold Cover
White
Tank Valve
Manifold
Cold Water
Green
Optional Tank Installation
Prefilter Housing
Membrane
Prefilter
Storage Tank
Post-polishing Filter

Figure 1

Installing the Water Supply Adapter

NOTE: Read all installation and operating instructions before installing and using your RO system.

The supply adapter fits 1/2-NPS supply threads. If local codes permit, it may be used to connect the PRO to the cold water supply line. If local codes do not permit the use of the supply adapter, alternate connectors can be obtained from your local plumbing wholesaler.

See Figure 2.

1. Turn off cold water supply line. If cold water line does not have a shut-off valve under the sink, you should install one.
2. Turn on the cold water faucet and allow all water to drain from line.
3. Disconnect cold water line from the threaded stub on bottom of main faucet.
4. Apply plumber tape onto threads of faucet stub and supply adapter. Screw the water supply adapter to the threaded faucet stub as shown.
5. Using the nut that previously connected the cold water line to the faucet, screw the cold water line to the male supply adapter threads.

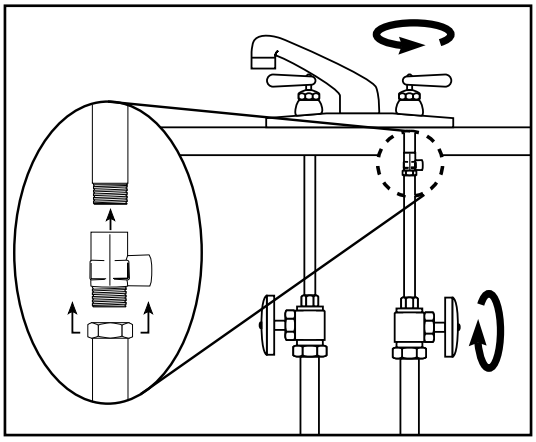

Figure 2

Selecting the Faucet Location

The drinking water faucet should be positioned with function, convenience and appearance in mind. An adequate flat area is required to allow faucet base to rest securely. The faucet fits through a 1-1/4 inch hole. Most sinks have pre-drilled 1-1/2 inch or 1-3/8 inch diameter holes designed for spray hoses. The drinking water faucet may be installed using one of these holes, despite their larger size. If these pre-drilled holes cannot be used or are in an inconvenient location, it will be necessary to drill a 1-1/4 inch hole for the faucet in the sink or through the countertop next to the sink.

Drilling the Faucet Hole

CAUTION **This procedure may generate dusts which can cause severe irritation if inhaled or if they come into contact with the eyes. The use of safety glasses and respirator for this procedure is recommended.**

DO NOT ATTEMPT TO DRILL THROUGH AN ALL-PORCELAIN OR PORCELAIN-COATED SINK. For applications on these types of sinks we recommend using the sprayer hole or mounting the faucet through the countertop.

When drilling through a countertop make sure the area below the drilled area is free of wiring and piping. Make certain that you have ample room to make the proper connections to the bottom of the faucet.

Do not drill through a countertop that is more than 1-inch thick.

Do not attempt to drill through a tiled, marble, granite or similar countertop. Consult a plumber or the countertop manufacturer for advice or assistance.

The following instructions apply to stainless steel sinks only. See Figure 3.

1. Line bottom of sink with newspaper to prevent shavings, parts or tools from falling down the drain.
2. Place masking tape over the area to be drilled to help prevent scratches if drill bit slips.
3. Mark point with center punch. Use a 1/4-inch drill bit to drill a pilot hole through sink.
4. Use a 1-1/4 inch hole saw to enlarge hole. Smooth rough edges with a file.

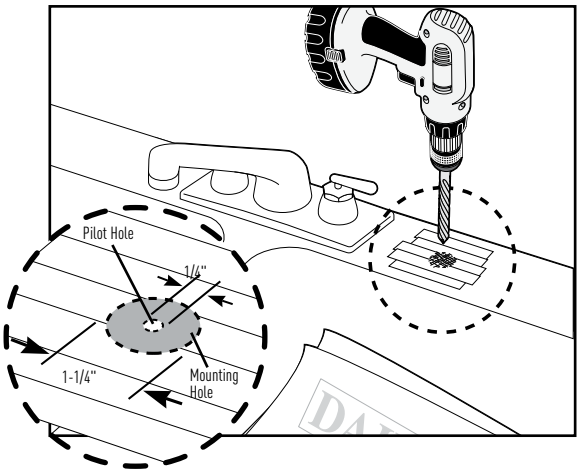

Figure 3

Mounting the Faucet

1. Loosen brass stem-nut on faucet, remove metal "C" disc (Figure 4).

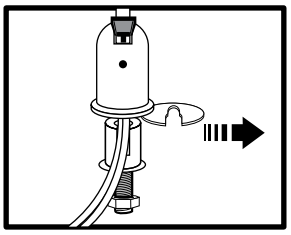

Figure 4

2. Holding the faucet, feed the three tubes through the hole in the sink. Position the faucet handle at the desired location (Figure 5).

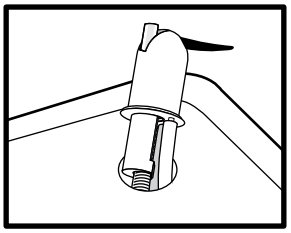

Figure 5

3. Center the faucet and slip "C" disc between the white spacer and the bottom of the counter or sink. Tighten the stem nut with a wrench until it is tight (Figure 6).

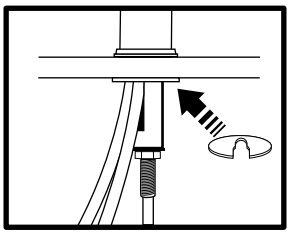

Figure 6

4. Making sure the faucet handle is in the down position, use a needle-nose pliers to pull the short plastic tube out of the top of the faucet base (Figure 7).

NOTE: **If handle should come off faucet base, make sure the T-Bar is parallel to the front of the faucet base before inserting handle. If T-Bar is not in the correct position the faucet will not work properly.**

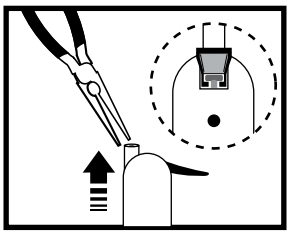

Figure 7

5. Lubricate the o-rings on the bottom of the faucet spout with supplied silicone lubricant. Use lubricant sparingly (Figure 8).

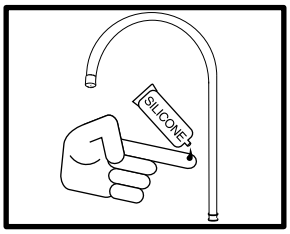

Figure 8

6. Insert goose-neck spout into faucet base firmly (Figure 9).

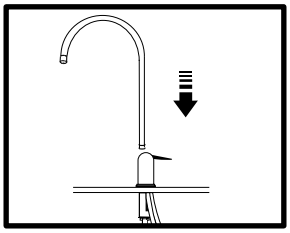

Figure 9

Installing the Drain Clamp

NOTE: If you have a single-basin sink with a disposal unit, call Technical Support at 1-800-279-9404 for options.

NOTE: Before installing the drain clamp, check the drain pipes under the sink for corrosion. Corroded pipes should be replaced before continuing with the installation.

1. Attach the drain clamp to a vertical section of the drainpipe, about 6 inches above the trap. Make sure the opening on the drain clamp is facing towards the drinking water faucet (Figure 10).

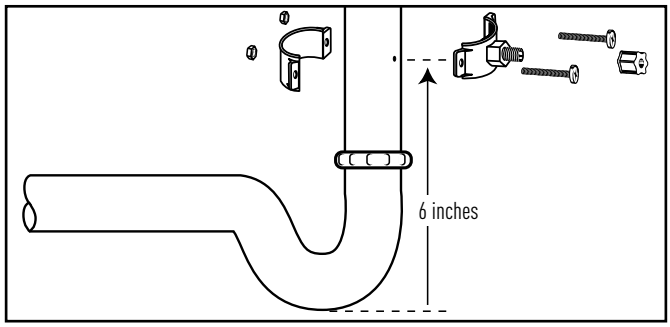

Figure 10

2. Using the fitting hole of the drain clamp as a guide, drill a 1/4-inch hole through one side of the drain pipe (Figure 11).

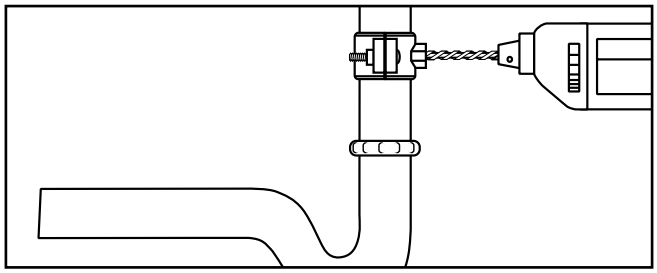

Figure 11

3. Remove the drain clamp from the drainpipe and enlarge the hole with a 3/8-inch drill bit (Figure 12). Use a file to remove rough edges from the drilled hole.

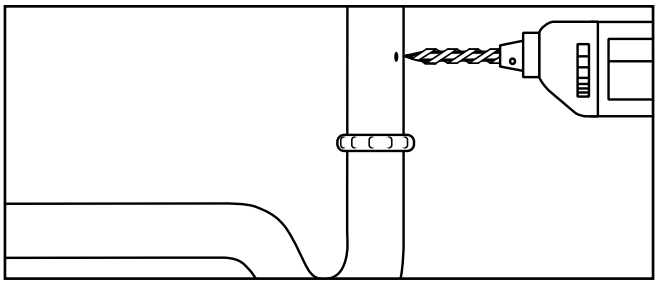

Figure 12

4. Make sure the black rubber gasket is adhered to the inside of the drain clamp and place the drain clamp assembly over the drilled hole. Look through the hole and position the clamp so that the center of the clamp hole is slightly higher (about 1/16 inch) than the center of the drilled hole. (Figure 13). Tighten the clamp securely.

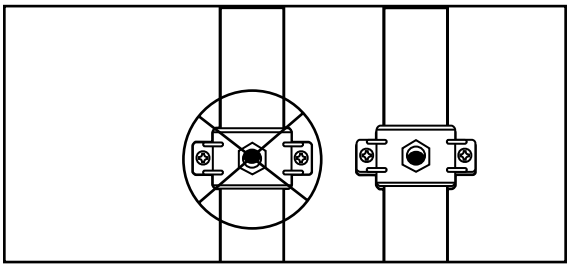

Figure 13

5. Screw the plastic compression nut onto the drain clamp until hand-tight (Figure 14).

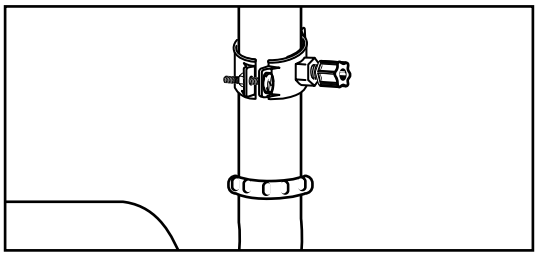

Figure 14

Connecting the Faucet to the Drain

NOTE: This is a gravity drain line. Any loops, kinks or sharp bends must be eliminated before proceeding. Failure to create a straight line to the drain may result in reject water leaking through the air gap in the faucet onto the counter top and below the faucet.

1. Align the white 3/8-inch tubing from the faucet with the compression nut on the drain clamp. Create as straight a path as possible with the tubing. Cut the tubing squarely below the nut and remove the internal and external burrs (Figure 15).

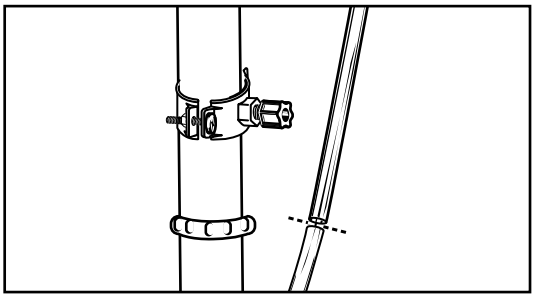

Figure 15

2. Loosen the compression nut two complete turns. Insert the tubing into the nut until it stops. Tighten with fingers, then tighten 1 to 2 turns with a wrench (Figure 16).

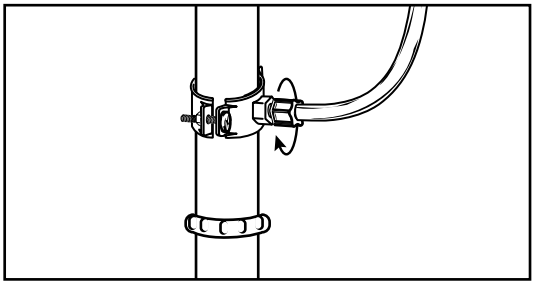

Figure 16

Installation of Mounting Screws

CAUTION When tank is full, it weighs approximately 40 pounds. Provide ample support under the tank.

If system is being installed under the kitchen sink, locate it on back or right side wall. Make sure to allow ample space for installation. To change the filter cartridges, a minimum of 1-1/2 inches of clearance is required underneath the filter housings. A minimum of 2 inches of clearance from the left side of the unit is also required or 6 inches from the left bracket mounting screw hole.

Install mounting screws at least 13-3/4 inches from cabinet floor and 5-3/8 inches apart. Leave a 5/16 inch space between the head of the screw and the wall to slip bracket onto screws.

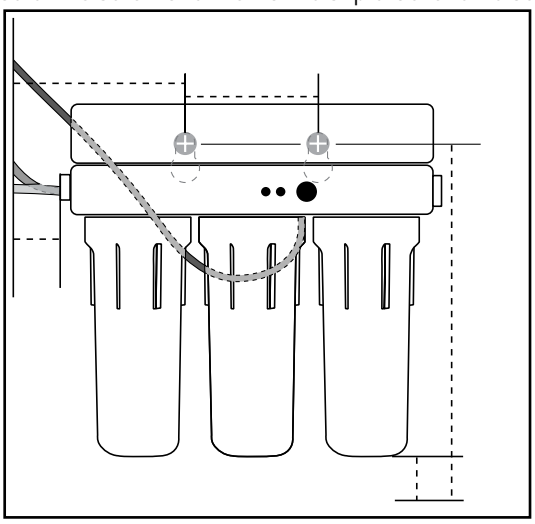

Figure 17

Connecting the Faucet to the System

1. Locate the red tubing (reject water line) from the drinking water faucet. Place a mark on the red tubing 5/8 inch from the end. Moisten the end of the tubing with water and insert tubing into the red quick-connect fitting found behind the membrane (middle) housing. Insert tubing until the mark is flush with the quick-connect opening (Figure 18).

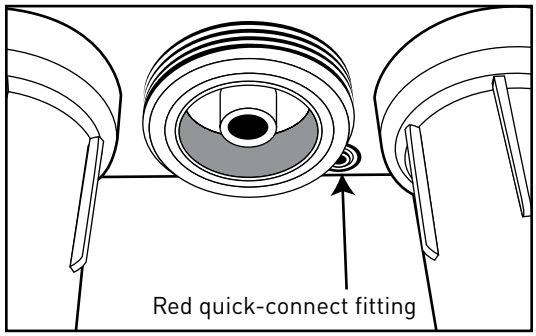

Figure 18

2. If desired, use the 1/4-inch elbow included with the installation kit. This elbow can be pressed in for installations in situations where room is not available to bend the tubing. This elbow fitting can also be swiveled. Locate the 1/4-inch fitting with the blue quick-connect collar on the left hand side of the RO system. Align the blue tubing from the faucet with the quick-connect fitting on the RO system. Place a mark on the blue tubing 5/8-inch from the end. Moisten the end of the tubing with water and insert until the mark is flush with the quick-connect opening (Figure 19).
   If tubing is not firmly connected, leaking will occur. It is important for the tubing to be inserted all the way until the mark is flush with the outer edge of the quick-connect insert.

NOTE: Tubing may be quickly and easily removed from the fitting if necessary by pressing the collar around the fitting while pulling the tubing with your other hand.

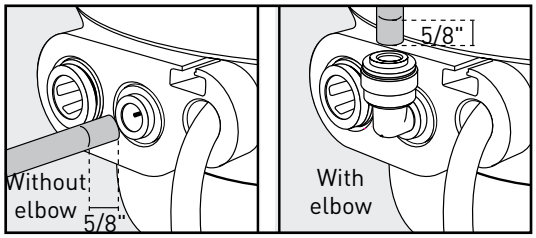

Figure 19

Connecting the Storage Tank to the System

CAUTION When tank is full, it weighs approximately 40 lbs. Provide ample support under the tank.

1. Remove the black protective cap to expose the 1/4-inch threaded opening at the top of the tank (Figure 20).
2. Thread the tank valve onto the top of the tank opening by turning it clockwise until snug.
3. Locate the green tubing. Place a mark on the green tubing 3/4 inch from each end. Moisten one end of the green tubing with water and insert with a twisting motion into the free port of the tank valve until the 3/4-inch mark is flush with the quick-connect fitting (Figure 20).

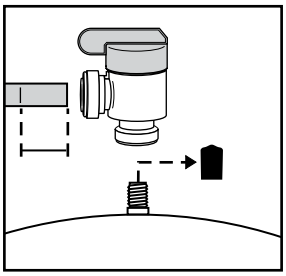

Figure 20

4. Install free end of green tubing to green quick-connect fitting or elbow as directed in Figure 21.

NOTE: Do not cut green tube. This line should be left at the pre-cut length for future service.

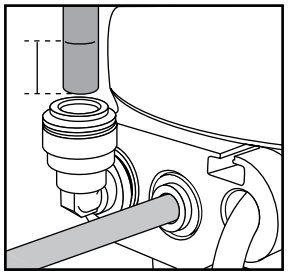

Figure 21

5. Place entire system over mounting screws on wall and slide down.

CAUTION Make certain system is firmly attached to wall to prevent it from falling and possibly becoming damaged.

NOTE: Use caution not to bend or pinch the tubing behind the system while attaching to mounting screws.

NOTE: The pressurized storage tank has a capacity of 1.9–3.2 gallons. The tank's air pressure is factory set at 5–7 psi when tank is empty.

Connecting the Supply Adapter and Inlet of Filter

See Figure 22.

1. Locate the pre-installed white plastic tubing on the left-hand side of the RO system. Place a mark 5/8 inch from the end of the tubing.
2. Wet tubing with water and insert into supply adapter 5/8 inch until mark is flush with fitting.

NOTE: Disconnecting the tubing from the Quick-Connect Fittings.

Routine maintenance and cartridge replacement will not require that you disconnect the tubing from the filter system; however, tubing may be quickly and easily removed from the fitting if necessary. First, turn off the water supply to the filter. Open faucet, then press in the gray collar around the fitting while pulling the tubing with your other hand.

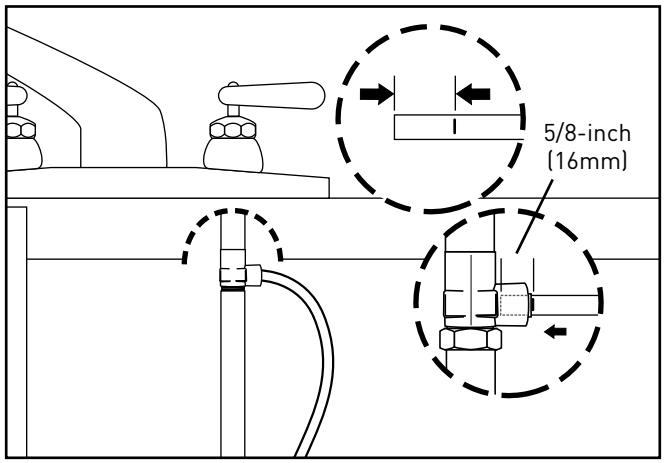

Figure 22

Installing the Membrane

See Figure 23.

1. Using the housing wrench, unscrew the middle (membrane) housing.

NOTE: Do not unwrap the tape around the membrane; it is part of the membrane. Do not squeeze the membrane.

2. Turn locking device clockwise to remove. Grasp the membrane by the central tube (the end with the two o-rings). Before insertion, lightly lubricate the brine seal with the silicone lubricant (included with membrane).
3. Gently slide the membrane into the housing. Pressing on the central tube of the membrane from the top only, push the membrane fully into the housing until the central tube is flush with the top of the housing. Be sure to push the membrane straight down into the housing. If the membrane is not centered in the housing, the locking device will not fit properly. After the membrane is seated, lightly lubricate the membrane o-rings with a small amount of the silicone lubricant.
4. Insert, and turn the locking device counterclockwise. Screw the housing back onto the RO system until it is hand-tight. DO NOT OVER TIGHTEN.

CAUTION The housing o-ring provides the watertight seal between the cap and the housing. It is important that the o-ring be properly seated in the groove below the threads of the housing or a water leak could occur.

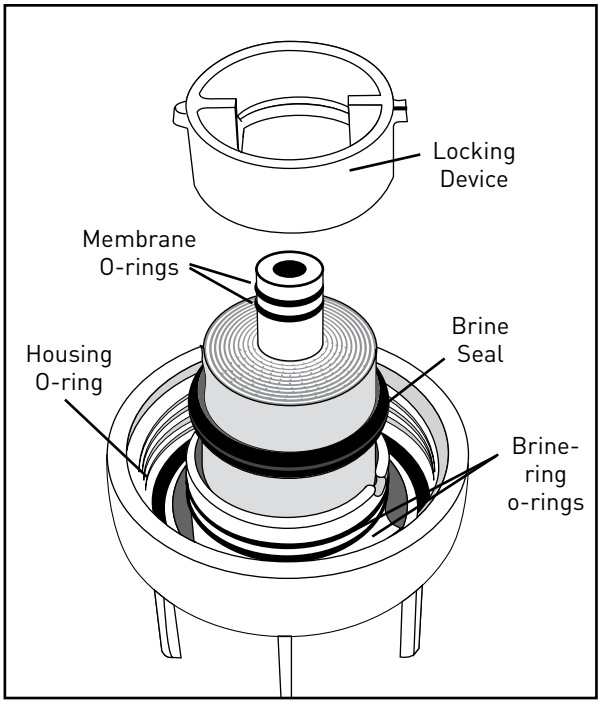

Figure 23

Faucet Operation

For controlled water flow, push the handle down. For constant water flow, lift the faucet handle to lock it in the open position (Figure 24).

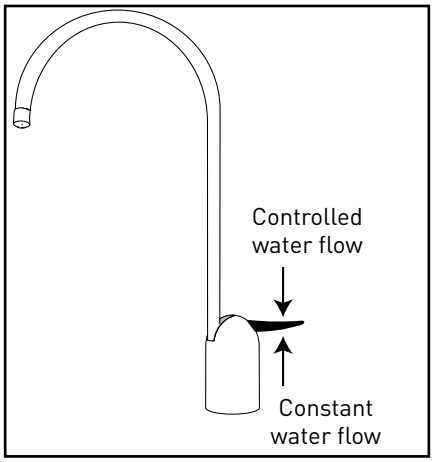

Figure 24

Battery Installation

1. Remove manifold cover.
2. Plug battery into leads.
3. Place battery in holder at the front of unit and replace cover.

SYSTEM STARTUP

NOTE: The reverse osmosis membrane is treated with a food grade sanitizing agent that may cause an undesirable taste. Although it is not harmful, it should be flushed from the system.

The post-polishing filter may contain fine black carbon particles. These fines are harmless, but may make the water appear gray in color. The carbon fines are flushed from the system with the first tank full of water.

The RO system does not produce a high volume of water on demand as an ordinary filter does. Water is produced at a slow, drop-by-drop rate. The system requires about 6–12 hours to fill the storage tank. As water is taken from the tank, the system automatically starts the cycle of replacing the water and then stops water production when the tank is full.

CAUTION Visually check the entire system for leaks. Remove the manifold cover and check the top of the manifold for leaks. If a leak is present, see TROUBLESHOOTING.

1. Turn off valve at top of storage tank (Figure 25).
2. Turn on the cold water supply (Figure 25).

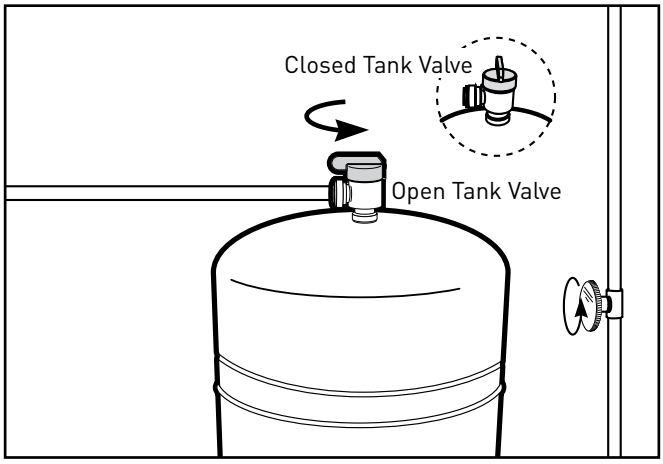

Figure 25

3. Lift the faucet handle to lock it in the open position and let it drip for 30 minutes.

NOTE: If the test button is pushed during the first 30 minutes of flushing, you may get an amber rather than a green light indication. This is due to the disinfectant agent being flushed from the membrane and is not a problem.

4. Turn off cold water supply and wait for the faucet to stop dripping. Place a tray under the system and remove the left (post-polishing) filter housing. Dump the water from the housing into the sink and insert the white post-polishing filter with the black gasket end facing up. Check the housing o-ring to make sure it is properly seated and screw the housing back onto the manifold. HAND TIGHTEN ONLY.
5. Completely open the cold water supply until it comes to a stop. Allow water to drip from the faucet for 3 more hours. Then close the faucet and open the valve on the storage tank. The tank valve is open when the handle lines up with the tubing connection.
6. Allow 6–12 hours for the tank to fill. Periodically check the installation for leaks. After the storage tank is filled, open the faucet to flush the post-polishing filter. Allow 4–5 minutes for all of the water to drain from the tank.
7. Close faucet and allow tank to fill.

NOTE: Initially, the water may appear cloudy. This is a result of air trapped in the post-polishing filter. It is not harmful and will disappear in a matter of minutes. It may take up to a week after installing a new post-polishing filter for the trapped air to dissipate.

The system is ready for operation. You can now enjoy quality water from your Reverse Osmosis system.

Connecting your Reverse Osmosis System to Refrigerator Icemaker / Water Dispenser

CAUTION If you are connecting this unit to your refrigerator/ icemaker with initial RO installation, wait to turn on the icemaker until the post-polishing filter has been flushed according to step 6 in SYSTEM STARTUP.

CAUTION Use plastic tubing and fittings. Do not use copper tubing or brass fittings.

NOTE: For optimum performance, it is recommended that the distance between the RO system and the refrigerator icemaker/water dispenser be no greater than 10 feet (3 m). At distances greater than 10 feet, the water pressure from the system may not be adequate to deliver water to the refrigerator.

Materials Required

(available from your local hardware store)

- Shut-off valve
- 1/4-inch (0.635 cm) polyethylene tubing (maximum length of 10 feet (3m) recommended)
- 1/4-inch x 1/4-inch x 1/4-inch (0.635 cm x 0.635 cm x 0.635 cm) compression or quick-connect tee

1. Turn off refrigerator water supply and icemaker. Consult manufacturer's guidelines.
2. Close tank valve (on top of storage tank).
3. Turn off water to RO system at the cold water supply.
4. Open drinking water faucet to relieve pressure.
5. Locate blue tubing leading to your drinking water faucet. Cut and insert the 1/4-inch x 1/4-inch x 1/4-inch compression or quick-connect tee into the blue tubing. Consult manufacturer's guidelines before installing the supply adapter.

NOTE: When cutting this blue tubing, you may experience some water leakage.

6. Using a length of 1/4-inch polyethylene tubing, connect the icemaker/dispenser line with the free port on the compression tee.
7. The shut-off valve should be installed as close to this port of the tee as possible. Shut-off valve should be installed in the OFF position. Consult manufacturer's guidelines before installing the shut-off valve.
8. Completely open cold water supply (until it comes to a stop).
9. Open tank valve.
10. Turn off the drinking water faucet.
11. Open shut-off valve at the supply adapter.
12. Turn on icemaker. Consult manufacturer's instructions.
13. Check for leaks and tighten connections if necessary.

TESTING YOUR REVERSE OSMOSIS SYSTEM

Dissolved Solids (TDS) Test

NOTE: Under NSF/ANSI Standard 58, it is highly recommended that you (the consumer) have your water tested at least every 6 months to verify that your system is performing satisfactorily.

PRO Monitored Reverse Osmosis System

Light Indicator Readings on the PRO

The PRO is equipped with a monitor (Figure 26) that checks the Total Dissolved Solids (TDS) that the system is reducing. This allows the user to see the quality of the water that the system is producing. Test the unit monthly. When the blue test button is pushed, the light system will read one of the following colors:

Green light:	Good Water
Amber light:	If this is a new installation, call Technical Support. Otherwise, draw 1 gallon of water from the unit. After 10 minutes, push the button to test. If the light is still amber, change the prefilter and empty the tank. If the light is still amber after 1 hour, you may need to replace the membrane. Determine when you last changed the membrane and call Technical Support at 1-800-863-9392.
No light:	The battery needs to be changed.

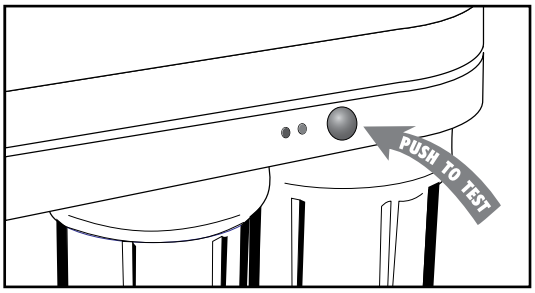

Figure 26

Nitrate Test Kit

A Nitrate Test Kit is included with this unit and is designed to indicate nitrate levels in the drinking water. Test the water monthly. The current EPA Maximum Contaminant Level (MCL) for Nitrate as Nitrogen (N) is 10 mg/L or 10 ppm. The current EPA maximum contaminant level (MCL) for Nitrite as Nitrogen (N) is 1 mg/L or 1 ppm. Results showing any nitrate breakthrough should be followed up with a laboratory analysis of the water.

⚠ WARNING: Consult with your doctor to see if you should drink water with the nitrate/nitrite levels found in your water.

Figure 27

Testing Instructions:

Testing instructions are included with the Nitrate Test Kit (Figure 27). If the Nitrate Test Kit is missing, please call 1-800-279-9404 for replacement.

MAINTENANCE

Use only the replacement elements and parts referred to in this manual. Failing to do so will void your warranty.

NOTE: Use a different sink or set aside water to wash and rinse housings. Read appropriate instructions to determine amount of water required.

Replacing the Prefilter and Post-polishing Filter Cartridges

Replacement Filter Cartridges

The Gray/Black Prefilter Cartridge (D-15) should be replaced every 3 months, or earlier if your water is highly turbid, and when changing the membrane.

The White Post-polishing Filter Cartridge (D-20) should be replaced at least every 12 months and when changing the membrane.

Materials Required

- PRO Replacement Cartridge Kit
- FDA-Grade silicone grease
- Clean washcloth
- Non-abrasive brush or sponge
- Clean rubber gloves (optional)
- Dishwashing soap

Replacing the Filter Cartridges

1. Close cold water supply and place a tray under the system to catch any water that spills during removal of the filter housings. If an icemaker is attached to the unit, turn it off and also the shut-off valve found at the 1/4-inch supply adapter.
2. Lift the faucet handle to lock it in the open position.
3. After water flow from the faucet stops, unscrew the filter housing from the left and/or right side of the manifold. Do not remove the membrane (center) housing. Discard used cartridges.

   NOTE: Use clean rubber gloves or wash hands thoroughly for this procedure to avoid contaminating the cleaning solution or any of the components of the system. It is recommended that clean rubber gloves be worn when cleaning and/or sanitizing the system and its components or handling new filter cartridges.

4. Locate and remove o-ring from grooves in the sump. Wipe grooves and o-ring clean of old lubricant and set aside. Rinse out bottom of sump and fill 1/3 full with water. Add 1 tablespoon of bleach and scrub cap and bottom of sump with non-abrasive sponge or cloth. Rinse thoroughly.
5. Inspect the o-ring for damage (i.e. nicks, scratches) and replace damaged o-rings. See REPLACEMENT PARTS for reorder information and part numbers

   NOTE: Do not get any of the electronic circuits or wiring wet when cleaning the unit.

6. Lightly lubricate the o-ring with a coating of clean silicone grease. With two fingers, press o-ring securely into groove below the threads of the housing.

CAUTION The housing o-ring provides the water-tight seal between the cap and the bottom of the housing. It is important that the o-ring be properly seated in the groove below the threads of the housing or a water leak could occur.

7. Insert the new cartridge into the housing. Make sure the cartridge slips over the standpipe in the bottom of the housing.

NOTE: Be sure to install cartridges in proper housings (Figure 1).

8. Screw the housing back onto the manifold. HAND-TIGHTEN ONLY.
9. Slowly open the cold water supply until it comes to a stop. Check for leaks.
10. Let water drip from drinking water faucet for 3 hours. Continue to periodically check for leaks.
11. Close faucet and wait 6–12 hours to allow the tank to fill. Open the drinking water faucet and drain one full tank to flush the carbon fines out of the system.
12. If the unit is attached to an icemaker, wait one hour before turning on the icemaker.

Replacing the Reverse Osmosis Membrane

Replacement Filter Cartridges

The Gray/Black Prefilter Cartridge and the White Post-polishing Filter Cartridge should be replaced when changing the membrane. See Materials Required below.

Materials Required

- PRO Replacement Cartridge Kit
- New membrane: PRO_RM Membrane
- Clean rubber gloves
- Clean washcloth
- Dishwashing soap
- Chlorine bleach
- FDA-Grade silicone grease
- Needle-nose pliers
- Safety glasses
- Large bucket
- 9-volt battery
- Non-abrasive brush or sponge

The Membrane (PRO) should be replaced every 12–24 months.

NOTE: When handling the membrane, do not squeeze it, as this will damage the membrane's effectiveness.

NOTE: It is recommended that you sanitize the system each time you change the membrane. It is not necessary to sanitize the system when changing only the prefilter or post-polishing filter cartridges.

NOTE: When installing a new membrane, it is recommended that you also replace the prefilter and post-polishing filter cartridges.

Removing the Filter Cartridges and Membrane

1. Turn off cold water supply. Place a tray under the system to catch any water that spills during the removal of the filter housings. If an icemaker is attached to the unit, turn it off along with the shut-off valve found at the 1/4-inch supply adapter.
2. Open the drinking water faucet to drain the tank. When the tank is drained, close the faucet.
3. Unscrew the middle (membrane) housing.
4. Remove the locking device by turning it clockwise. Grasp the membrane tube with a needle-nose pliers and pull. Discard the old membrane.
5. Unscrew the pre- and postfilter housings from the manifold and discard used cartridges.
6. Remove the housing o-ring from the grooves below the housing threads. Wipe the o-rings clean and also the grooves in the filter housing. Set o-rings aside.

NOTE: Use clean rubber gloves or wash hands thoroughly for this procedure to avoid contaminating the cleaning solution or any of the components of the system. It is recommended that clean rubber gloves be worn when cleaning and/or sanitizing the system and its components or handling new filter cartridges.

7. Wash the housings in the sink with dish soap and a clean, non-abrasive washcloth or brush. Clean the filter housings and the inside of the manifold and rinse them well with clean, potable water.

NOTE: Do not get any of the electronic circuits or wiring wet when cleaning the unit.

CAUTION WEAR SAFETY GLASSES WHILE PERFORMING THIS PROCEDURE TO AVOID EYE CONTACT AND INJURY.

CAUTION Read WARNING information on the bleach container before using its contents.

CAUTION Handle sanitizing solution carefully to avoid contacting and injuring unprotected areas of the body.

8. Make up a sanitizing solution of 1/3 teaspoon (1.5 ml) of household bleach and 1 gallon (3.8 L) of clean, potable water in a bucket. Mix solution well.

NOTE: Excessive concentrations of bleach may damage plastic and rubber components. Rinse all parts that contact bleach thoroughly with clean, potable water.

9. Lightly lubricate each housing o-ring with a coating of clean silicone grease. With two fingers, press each o-ring securely into groove below the threads of the housing.

CAUTION The housing o-ring provides the water-tight seal between the cap and the bottom of the housing. It is important that the o-ring be properly seated in the groove below the threads of the housing or a water leak could occur.

10. Add one cup or 8 oz. (236 ml) of sanitizing solution to each filter housing and install them onto the manifold. DO NOT INSTALL FILTERS OR MEMBRANE AT THIS TIME.

NOTE: TIGHTEN FILTER HOUSINGS BY HAND ONLY. DO NOT USE WRENCH.

11. Slowly open source water at the cold water supply until completely open.
12. Open the drinking water faucet. Close the faucet as soon as water begins to flow from the spout.
13. Wait 5 minutes, then close the source water at the cold water supply.

14. Wait 25 minutes, then open the drinking water faucet and let the water flow to drain.

NOTE: Do not attempt to remove the filter housings until the water flow stops.

15. Remove the filter housings and dispose of the water. Rinse the housings thoroughly with clean, potable water.
16. Place the empty post-polishing filter housing on the left side of the unit. HAND TIGHTEN ONLY.

NOTE: DO NOT put the post-polishing filter into the housing at this time. It will be put into the housing after the membrane has been flushed.

17. Insert the prefilter cartridge into the right housing and attach to the right side of the unit. HAND TIGHTEN ONLY.

NOTE: Use the silicone lubricant supplied with the membrane for steps 18,19 and 20.

18. Lightly lubricate the inside of the membrane (middle) threaded cap (Figure 29).

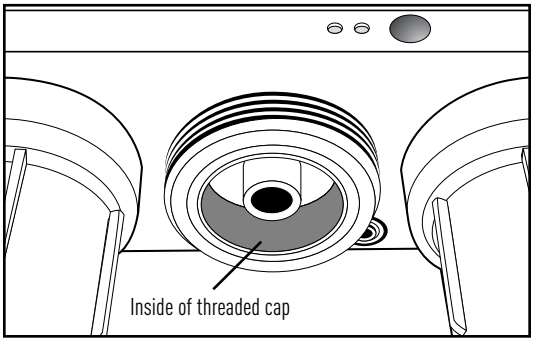

Figure 28

19. Lightly lubricate both sides of the brine seal (Figure 29).

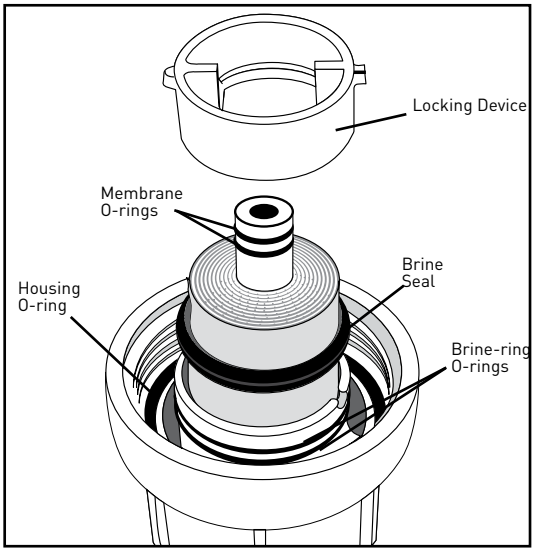

Figure 29

20. Gently slide the membrane into the housing. Pressing on the central tube of the membrane from the top only, push the membrane fully into the housing until the central tube is flush with the top of the housing. Be sure to push the membrane straight down into the housing. If the membrane is not centered in the housing, the locking device will not fit properly.
21. After the membrane is seated, lightly lubricate the two small o-rings at the end of the membrane. Also, lightly lubricate both brine ring o-rings (Figure 29).

CAUTION The rubber o-rings provide the water-tight seal between the cap and the housing. It is important that the o-ring be properly seated in the groove below the threads of the housing or a water leak could occur.

22. Insert, then turn the locking device counter-clockwise. Screw the housing back onto the RO system until it is hand-tight. DO NOT OVER TIGHTEN.
23. To complete the flushing of the membrane and post-polishing filter and assembly of the unit, completely open the cold water supply until it comes to a stop. Allow water to drip from the faucet for 3 more hours. Then close the faucet and open the valve on the storage tank. The tank valve is open when the handle lines up with the tubing connection.

TROUBLESHOOTING

If you are experiencing a problem not listed in this manual, shut off the cold water supply and close the tank valve. Call Technical Support at 1-800-279-9404.

Leaks between the filter housing and manifold

1. Turn off cold water supply to system. Close tank valve. Open drinking water faucet to relieve water pressure.
2. Using the housing wrench, remove the housing with the leak.
3. Remove and clean housing o-ring and lubricate with clean silicone grease. Clean o-ring groove below threads of housing to remove any dirt or particles that may be preventing the o-ring from sealing completely. With two fingers, insert o-ring in groove and press into place.
4. Tighten housing back onto manifold. HAND TIGHTEN ONLY.
5. Turn on cold water supply. Open tank valve. Close drinking water faucet after water begins to flow. If leaks persist, call Technical Support.

Leak between tank valve and storage tank

1. Turn off water supply to system. Open faucet to drain storage tank. Let faucet run for 3–5 minutes until it drips.
2. Remove green tubing from tank valve by pressing the collar around the fitting while pulling the tubing with your other hand.
3. Unscrew the tank valve from the storage tank.
4. Place two wraps of plumber tape on the threads of the storage tank.
5. Thread the tank valve onto the top of the tank opening by turning it clockwise until snug.
6. Cut off 1 inch of tubing. Tubing should be cut squarely. Internal and external burrs should be removed. Place a mark on tubing 3/4 inch from end of tubing.
7. Insert tubing until the mark is flush with the quick-connect fitting.
8. Turn on water supply and close drinking water faucet.
9. Allow system to pressurize for several hours and check for leaks.
10. Check for leaks after tank is fully pressurized (6–12 hours). If leak persists, call Technical Support.

Leaks at quick-connect fittings

1. Close tank valve, close water supply and open drinking water faucet.
2. Press collar around the quick-connect fitting while pulling the tubing with your other hand.
3. Cut off 1 inch of tubing. Tubing should be cut squarely. Internal and external burrs should be removed. Place a mark on tubing 5/8 inch from end on 1/4-inch tubing or 3/4 inch from end on 3/8-inch tubing.
4. Insert tubing until the mark is flush with the quick-connect fitting.
5. Open the saddle valve until it comes to a stop. Open the tank valve and close drinking water faucet. If leaks persist, call Technical Support.

Leaks from faucet

1. Check to make sure white tubing leading from the drinking water faucet to the drain is as straight as possible (it is usually necessary to cut this line during installation). Any kinks or sags in this drain line will impede the flow of water to the drain.
2. Check to make sure there is no foreign matter clogging the drain line or at the drain clamp hole. If leaks persist, call Technical Support.
3. Check to make sure the drain clamp and the drain hole are properly aligned. Refer to Figure 13.

No flow or slow flow from the brine (reject) line (Less than 6 fl. oz. or 180 milliliters per minute)

NOTE: Before checking brine (or reject) flow, make sure the unit is producing water by turning the valve on the storage tank off and opening the drinking water faucet. Water should drip from faucet.

1. Replace prefilter according to REPLACING THE PREFILTER AND POST-POLISHING FILTER CARTRIDGES and recheck the brine (or reject) flow rate.
2. If the prefilter is not at fault, the brine (or reject) flow controller could be clogged. Call Technical Support.

High TDS in Product Water (amber light on PRO)

If high TDS (Total Dissolved Solids) are detected in the product water, the amber light indicator on the PRO will light when the blue button is pressed. The prefilter may need to be changed, the RO membrane may need to be installed or replaced, or the reject flow control tubing may be clogged. If this is a new installation, call Technical Support. Otherwise, draw 1 gallon of water from the unit. After 10 minutes, push the button to test. If the light is still amber, change the prefilter and empty the tank. If after 1 hour the light is still amber you may need to replace the membrane. Determine when you last changed the membrane and call Technical Support at 1-800-279-9404.

Limited Flow at Drinking Water Faucet

1. Turn off water supply to system.
2. Lift drinking water faucet handle to lock it in the open position.
3. Unscrew the blue cap at the base of the storage tank to expose air valve. Use a small air compressor or bicycle pump to add air to the storage tank. This will force the water out of the storage tank through the faucet. Continue to add air until no more water comes out of the faucet.
4. Turn off the drinking water faucet.
5. Using an air pressure gauge, adjust the pressure in the storage tank to approximately 7 psi.
6. Replace the blue cap.
7. Open the cold water supply until it comes to a stop. Let the system run 6–12 hours to fill the tank. A full tank weighs approximately 40 pounds. If performance has not improved, call Technical Support.

Gradual Return of Taste and Odor

After a long period of time a gradual return of noticeable taste and odors may indicate that the system needs cleaning and servicing. Replace all cartridges. See Replacing the Reverse Osmosis Membrane, page 13.

Sudden Return of Taste and Odor

If shortly after complete servicing, noticeable taste and odors return, contact Technical Support.

PERFORMANCE DATA

Important Notice: Read this performance data and compare the capabilities of this system with your actual water treatment needs. It is recommended that before installing a water treatment system, you have your water supply tested to determine your actual water treatment needs.

This system has been tested according to NSF/ANSI 58 for the reduction of the substances listed below. The concentration for the indicated substances in water entering the system was reduced to a concentration less than or equal to the permissible limit for water leaving the system, as specified in NSF/ANSI 58.

Model PRO

Substance	Influent Challenge Concentration	Maximum Permissible Product Water Concentration	Reduction Requirements	Minimum Reduction	Average Reduction
Standard 58					
Total Dissolved Solids	750 ± 40 mg/L	187 mg/L		97.3%	98.5%
Pentavalent Arsenic†	0.30 mg/L ±10%	0.025 mg/L		98.2%	99.0%
Fluoride	8.0 ± 10%	1.5 mg/L		84.1%	91.2%
Cysts	Minimum 50,000/mL		99.95%	99.99%	99.99%
Turbidity	11 mg/L ± 1 NTU	0.5 NTU		99.6%	99.9%
Lead	0.15 mg/L ± 10%	0.010 NTU		93.3%	97.7%
Nitrate plus Nitrite (both as N)	30.0 mg/L±10%	10.0 mg/L		90.1%	93.2%
Nitrate	27.0 mg/L ± 10%	10.0 mg/L		90.2%	93.2%
Nitrite	3.0 mg/L ± 10%	1.0 mg/L		91.0%	93.5%
Selenium	0.10 mg/L ± 10%	0.05 mg/L		59.0%	84.7%
Copper	3.0 mg/L ± 10%	1.3 mg/L		97.8%	99.3%
Cadmium	0.03 mg/L ± 10%	0.005 mg/L		95.1%	97.6%
Hexavalent Chromium	0.3 ± 10%	0.1 mg/L		97.8%	98.7%
Trivalent Chromium	0.3 mg/L ± 10.0	0.1 mg/L		93.2%	96.8%
Radium 226/228	25 pCi/L ± 10%	5pCi/L			
Barium	10.0 mg/L ± 10%	2.0 mg/L		94.2%	97.4%
Standard 42					
Std. 42 Chlorine Reduction*	2.0 mg/L ± 10%		≥ 50%		87.5%

Production Rate: 5.7 gpd (28.8 Lpd)

*Post filter only (D-20), Flow Rate=1.0 gpm (3.8 L/min); Capacity=1000 gallons (3785 L).

†The PRO shall only be used for arsenic reduction on chlorinated water supplies containing detectable residual free chlorine at the system inlet. Water systems using an in-line chlorinator should provide a one-minute chlorine contact before the RO system.

⚠ WARNING: Do not use with water that is microbiologically unsafe or of unknown quality without adequate disinfection before or after the system. Systems certified for cyst reduction may be used on disinfected waters that may contain filterable cysts.

NSF/ANSI Standard 58 certified to reduce cysts such as Cryptosporidium and Giardia by mechanical means.

EPA Est. No. 090375-MEX-001

The tested efficiency rating for these systems is 10.46%. Efficiency rating means the percentage of the influent water to the system that is available to the user as reverse osmosis treated water under operating conditions that approximate typical daily usage. The tested recovery rating is 20.36%. Recovery rating means the percentage of the influent water to the membrane portion of the system that is available to the user as reverse osmosis treated water when the system is operated without a storage tank or when the storage tank is bypassed.

NOTE: Substances reduced are not necessarily in your water. Filter must be maintained according to manufacturer's instructions, including replacement of filter cartridges.

Test Conditions

Flow Rate	= as noted for filter system
Inlet Pressure	= 60 psi (4.1 bar)
pH	= 7.5±1
Temperature	= 68°F ± 5°F (20°C ± 2.5°C)

Operating Requirements

Pressure	= 40–100 psi (2.8–6.9 bar)
Temperature	= 40–100°F (4.4–37.8°C)
Turbidity	= 1 NTU Max.

The PRO has been tested for the treatment of water containing pentavalent arsenic [also known as As(V), As(+5), or arsenate] at concentrations of 0.30 mg/L or less. This system reduces pentavalent arsenic, but may not remove other forms of arsenic. This system is to be used on water supplies containing a detectable free chlorine residual or on water supplies that have been demonstrated to contain only pentavalent arsenic. Treatment with chloramine (combined chlorine) is not sufficient to ensure complete conversion of trivalent arsenic to pentavalent arsenic. Please see the Arsenic Facts section of the Performance Data Sheet for further information.

Testing was performed under standard laboratory conditions; actual performance may vary.

The following performance claims for the PRO are not tested or certified by NSF.

Model PRO

Substance	Average Influent Concentration	Average (max.) Effluent Concentration	Average Concentration
Standard 58			
Sulfate	759.5 ppm	7.0 ppm	99.1%
Magnesium	29.0 ppm	0.1 ppm	99.7%
Zinc	10.2 ppm	0.05 ppm	99.5%
Ammonia	3.27 ppm	0.57 ppm	82.5%
Tannin	3.70 ppm	ND (2.0) ppm	>49.5%

Testing performed at 73°F ± 5°F (22.7°C ± 2.5°C), pH of 7.5 and 50 psi (3.45 bar) pressure.

Arsenic Fact Sheet

Arsenic (abbreviated As) is found naturally in some well water. Arsenic in water has no color, taste or odor. It must be measured by a lab test. Public water utilities must have their water tested for arsenic. You can get the results from your water utility. If you have your own well, you can have the water tested. The local health department or state environmental health agency can provide a list of certified labs. The cost is typically $15–$30. Information about arsenic in water can be found on the Internet at the US Environmental Protection Agency website: www.epa.gov/safewater/arsenic.html.

There are two forms of arsenic: pentavalent arsenic [also called As(V), As(+5), and arsenate] and trivalent arsenic [also called As(III), As(+3) and arsenite]. In well water, arsenic may be pentavalent, trivalent, or a combination of both. Special sampling procedures are needed for a lab to determine what type and how much of each type of arsenic is in the water. Check with the labs in your area to see if they can provide this type of service.

Reverse osmosis (RO) water treatment systems do not remove trivalent arsenic from water very well. RO systems are very effective at removing pentavalent arsenic. A free chlorine residual will rapidly convert trivalent arsenic to pentavalent arsenic. Other water treatment chemicals such as ozone and potassium permanganate will also change trivalent arsenic to pentavalent arsenic. A combined chlorine residual (also called chloramine) may not convert all the trivalent arsenic. If you get your water from a public water utility, contact the utility to find out if free chlorine or combined chlorine is used in the water system.

The PRO system is designed to remove pentavalent arsenic. It will not convert trivalent arsenic to pentavalent arsenic. The system was tested in a lab. Under those conditions, the system reduced 0.30 mg/L (ppm) pentavalent arsenic to 0.010 mg/L (ppm)(the USEPA standard for drinking water) or less. The performance of the system may be different at your installation. Have the treated water tested for arsenic to check if the system is working properly.

The RO component of the PRO system must be replaced every 12–24 months to ensure the system will continue to remove pentavalent arsenic.

CALIFORNIA PROPOSITION 65 WARNING

⚠ WARNING: This product contains chemicals known to the State of California to cause cancer or birth defects or other reproductive harm.

REPLACEMENT PARTS

1	EV929510	PRO Replacement Cartridge Kit
2	EV929500	PRO Membrane Replacement Kit
3	SH144925	Nitrate/Nitrite Test Kit (PRO)
4	SH244820	Drinking Water Faucet
5	SH144747	Manifold Cover
6	154208	Manifold (PRO)
7	1143330	Housing O-ring (OR-233)
8	153126	Left and Right Housing
9	144988	Middle (Membrane) Housing
10	150424	Housing Wrench (SW-5)
11	144653	Auto Shut-Off Assembly
12	SH144764	3/8-inch Elbow
13	SH143370	1/4-inch Elbow
14	SH144616	Drain Clamp Assembly
15	SH143431	1/2-inch x 1/2-inch x 1/4-inch Supply Adapter
16	SH144847	Membrane Locking Device
17	SH144829	Tank Valve
18	SH144165	Storage Tank with Stand

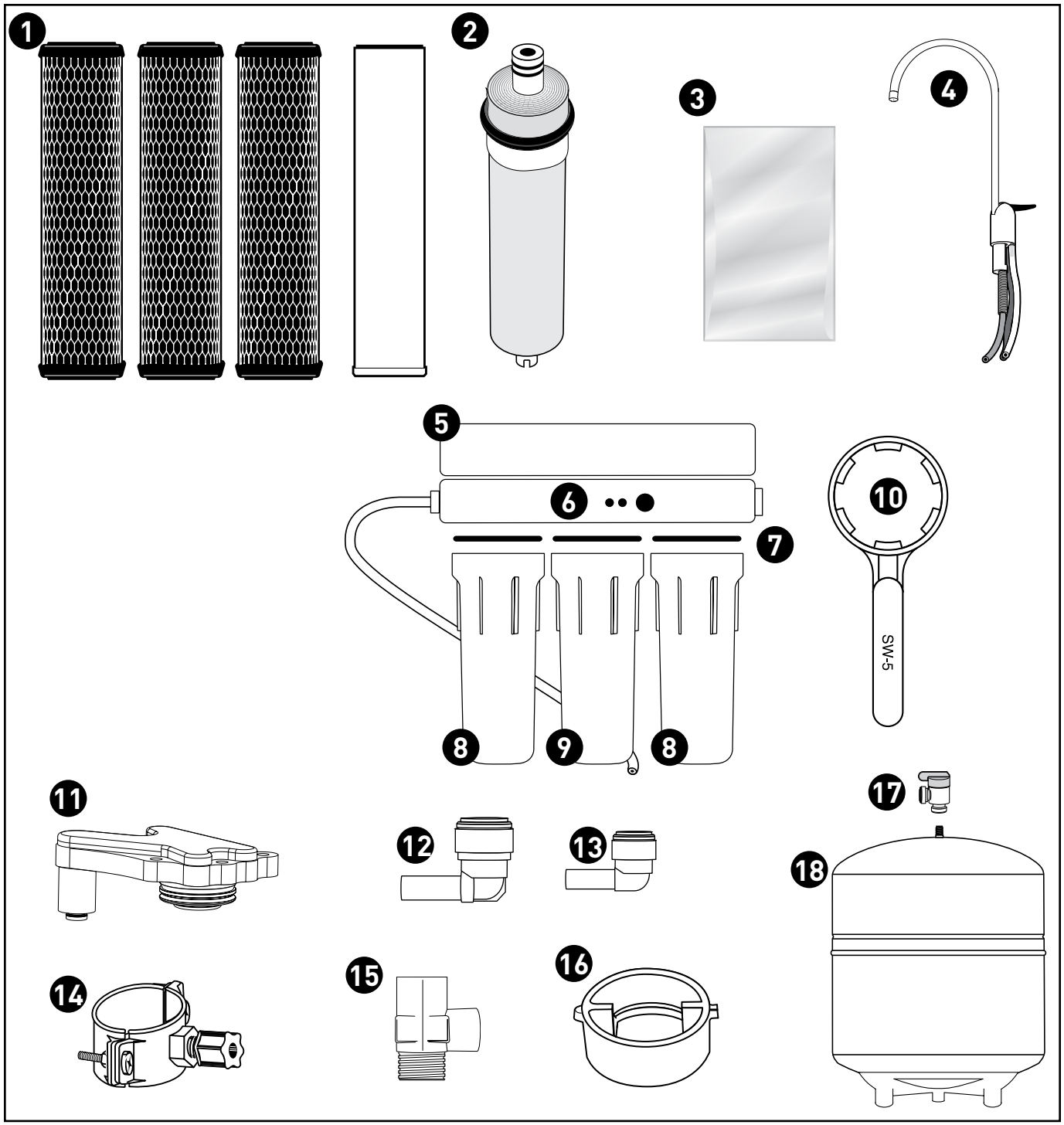

IOWA RESIDENTS ONLY:

_____

Store or seller's name

_____

Address

_____

City_____ State _____
Zip_____

_____

Seller's signature

_____

Customer's signature

_____

Date

For Everpure® Product Warranties visit:
Everpure® para las gasantías de los productos visite:
Pour Everpure® garanties produit visitez le site:
www.everpure.com

FILTRATION & PROCESS
5730 NORTH GLEN PARK ROAD, MILWAUKEE, WI 53209
P: 262.238.4400 | WWW.PENTAIRAQUA.COM | CUSTOMER CARE: 800.279.9404 | tech-support@pentair.com

All Pentair trademarks and logos are owned by Pentair, Inc. or its affiliates. All other registered and unregistered trademarks and logos are the property of their respective owners. Because we are continuously improving our products and services, Pentair reserves the right to change specifications without prior notice. Pentair is an equal opportunity employer.
161136 REV A JE14 © 2014 Pentair Residential Filtration, LLC. All Rights Reserved.