Pump Installation and Service Manual

HYDROMATIC®

SKV50

Submersible Sewage Ejector Pump

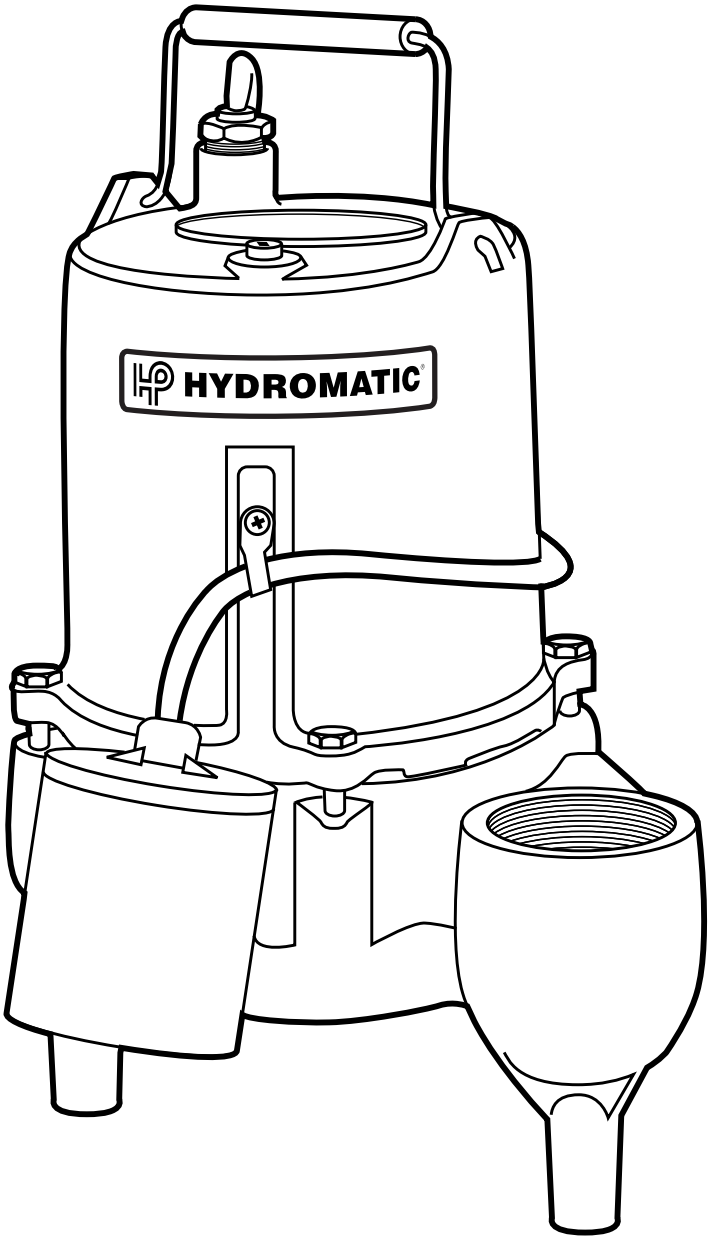

NOTE! To the installer: Please make sure you provide this manual to the owner of the pumping equipment or to the responsible party who maintains the system.

Pentair Water™

General Information

Thank you for purchasing your Hydromatic® pump. To help ensure years of trouble-free operation, please read the following manual carefully.

Before Operation:

Read the following instructions carefully. Reasonable care and safe methods should be practiced. Check local codes and requirements before installation.

Attention:

This manual contains important information for the safe use of this product. Read this manual completely before using this product and refer to it often for continued safe product use. DO NOT THROW AWAY OR LOSE THIS MANUAL. Keep it in a safe place so that you may refer to it often.

WARNING: Before handling these pumps and controls, always disconnect the power first. Do not smoke or use sparkable electrical devices or flames in a septic (gaseous) or possible septic sump.

Pump Warning

To reduce risk of electrical shock:

1. **Risk of Electrical Shock:**

   This pump has not been investigated for use in swimming pool areas.

2. **Risk of Electrical Shock:**

   Connect only to a properly grounded receptacle.

   Septic tank to be vented in accordance with local plumbing codes.

   Do not smoke or use sparkable electrical devices or flame in a septic (gaseous) or possible septic sump.

   If a septic sump condition may exist and if entry into sump is necessary, then (1) provide proper safety precautions per OSHA requirements and (2) do not enter sump until these precautions are strictly adhered to.

   Do not install pump in location classified as hazardous per N.E.C., ANSI/NFPA 70 - 1999.

   Failure to heed above cautions could result in injury or death.

Pump Installation

These important instructions must be followed for satisfactory performance of your pump. Before installation, check your local electrical and plumbing codes.

1. Provide proper sump. Recommended minimum sump diameter is 18".
2. Make sure the wide-angle float switch (excluding those automatic models equipped with a diaphragm pressure switch) hangs freely. The float should not come in contact with the side or bottom of the sump pit.
3. Make sure sump is free of string, cloth, nails, gravel, etc. before installing pump.
4. Do not set pump directly on the bottom of sump pit if it is not solid. Raise the pump by placing bricks or concrete blocks underneath it.
5. Use steel or plastic pipe for all connecting lines between pump and sewer outlet.

Note: Some city regulations do not allow installing a pump with plastic pipe. Check local regulations.

6. In applications where the pump may sit idle for months at a time, it is recommended that the pump(s) be cycled every month to ensure the pumping system is working properly when needed.
7. Hydromatic check valve should be installed in discharge pipe. Install check valve with arrow on valve body pointing in the direction of the flow.
8. A shutoff valve should also be used.
9. An audible alarm system, such as the Q Alert, for high water conditions should be installed in every pump pit for greater protection.

Note: The Q Alert is for indoor use only. For outdoor applications contact your Hydromatic distributor.

10. Connect to power source using 3-prong grounded AC receptacle. Do not remove ground pin from electrical plug. Do not use an extension cord or adaptor plug.
11. For proper automatic operation, make sure the pump power cord is plugged into the back of the piggyback receptacle on the wide angle float switch.

12. To ensure that the pump is properly installed, fill basin with enough water to activate pump. Allow the pump to go through several on-off cycles to assure satisfactory operation.
13. Use pump partially or completely submerged for pumping waterlike liquids (temperature to 140° F). The SKV50 will pump solid materials up to 2" (spherical) in diameter.

Caution: Do not pump flammable liquids, strong chemicals or salt water.

Your pump warranty is void...

If... power cord has been cut.

If... pump has been used to pump mud, cement, tar, abrasives or chemicals.

If... pump has been used for pumping of hot water (above 120° F).

If... pump has been dismantled by other than authorized Hydromatic service center or distributor.

Pump Servicing

Read the following instructions carefully before replacing any parts. Reasonable care and safe methods should be practiced. Check local codes and requirements before installation. Only competent electrician should make the installations.

The following steps should be performed by an authorized Hydromatic service center or distributor.

Note: Use extreme caution around electrical devices. Electrical shock may occur.

1. Before removing pump from the sump, check to be sure the problem is not a blown fuse, tripped circuit breaker or a power cord not completely inserted into the receptacle.
2. If the unit is being operated by an optional control switch, unplug the pump from the piggyback receptacle and plug the pump directly into the power source. If the pump starts each time it is plugged directly into the receptacle and does not start each time when plugged into the piggyback switch with the float raised or diaphragm pressed up to a start position, replace the complete switch assembly and retest with new assembly.
3. If pump fails the above two steps, remove pump and switch from power source to avoid electrical shock. Then pull the pump from the sump by the handle. Sandblast, if possible, any dirt or trash from the outside of the pump before dismantling.
4. If the above tests have not resolved the problem, it may be in the electrical components of the pump. Starting with the power cord, inspect for cuts or nicks in the insulation. If the cord is damaged – replace it!
5. Using the ohmmeter, check the resistance of the motor windings by connecting one lead clip to each electrical “flat” prong on the power cord

Pump Servicing

plug. The ohmmeter should be on R X 1 setting. Normal readings are 1.4 to 1.54 ohms for 115V, 4.5 to 4.9 for 230V.

To check the ground, place the ohmmeter on R X 100k, connect one lead clip to the "ground" prong on the power cord and touch the other lead clip to each "flat" prong individually. If the reading is other than infinity (∞ on the ohmmeter scale), a leakage through stator insulation or moisture in the windings is occurring and the stator must be removed, dried out and rechecked. A reading at zero indicates a dead short and the stator will have to be replaced.

6. To check to see if water has entered the motor cap, remove the pipe plug (14) at the top of the pump and drain the oil into a bucket. A milky appearance to the oil indicates that water has entered through either worn or damaged seals or O-rings and replacement is necessary.
7. Remove the four hex-head screws (7) from the motor housing and lift off the motor housing (4) very carefully as a grounding wire is attached to the inside of the motor housing (4). Remove the ground screw (13) and set the motor housing (4) aside.
8. To remove impeller, hold the rotor shaft assembly with screwdriver (screwdriver slot in shaft). Carefully tap impeller off shaft with a plastic or rubber hammer. Tap impeller (11) counterclockwise to remove. Loctite #277 is applied to shaft at assembly, so to remove impeller it will be necessary to break this seal. This is why the plastic or rubber hammer is used to avoid damage to the impeller.
9. Insert a screwdriver under the edge of the ceramic seal (6) and lift it off.
10. Remove the stationary half of the seal (6) by tapping it out lightly from the top of the seal plate and then clean the area with a cloth.
11. Remove the four bolts (16) holding the motor (12) onto the seal plate (10) and tap the shaft and rotor assembly out with a plastic or rawhide hammer. The lower ball bearing will come out with the shaft and rotor assembly. If the bearing is rusted or feels rough when turned, it should be replaced as in Step 13.
12. Coat the replacement seal (6) with a thin oil (dielectric, same as in motor housing) coating and use a plastic pusher to install the seal (6) into the seal plate (10). Do not use any sharp instruments that may damage the seal. Do not chip, scratch or mar the carbon face.
13. If ball bearing replacement is necessary as determined in Step 11, press the bearing on the shaft, pushing only on the inner face. If a press is not available, the bearing can be tapped on using a sleeve that bears only on the inner face.

    Pressing on the outer face will result in flat spots on the bearing and cause early failure.
14. Push the new rotor shaft and ball bearing assembly into the seal plate. (Note that the replacement rotor must be of the same manufacture as the existing stator, or vice versa.) Reassemble the stator (12) to the seal plate (10) with the four long cap screws (16). Be sure to tighten down the bolts evenly and firmly to prevent cocking of the stator. An uneven assembly can cause the rotor to rub the motor causing the motor to short.
15. Press the new ceramic seal (6) in place with the rubber ring facing the impeller. This should have a thin oil (dielectric, same as in motor housing) coating.

Note: Ceramic must be kept clean. Any dirt will cause seal failure.

16. Start the impeller on the shaft one to two turns; then add a drop of Loctite #277 to the impeller threads and screw the impeller hand tight. The impeller will force the ceramic seal into position. The shaft should be free of dirt, grease, etc., or the Loctite will not hold as designed.

Note: Loctite overrun onto the seal or bearing will result in shaft seizure.

17. Remove the old seal ring (8) and stretch on new ring with O-ring lube.

    Do not roll the ring onto seal plate or water leakage into the motor housing will result.
18. Fasten the ground wire inside the motor housing and tuck wires up into the housing to prevent rubbing on the rotor; then assemble housing (4) to volute (9) with bolts (7).
19. Check for seal leaks by pressurizing the pump to 7 to 9

pounds of air pressure. Air bubbles should appear at first, then stop. If air bubbles continue, then recheck seals.

20. Fill the motor cap with high-grade transformer oil such as Sohio (6) Factopure SE40 Oil (or equivalent) to at least 1⁄4" over motor windings top plate, or to the top of the stator.

    Do not fill the motor housing completely. Allow air space for expansion.

    Replace oil pipe plug (14). Recheck with ohmmeter before applying power.

21. Plug the power cord into a grounded outlet and check pump running. Motor should run smoothly and be free of vibration.

Pump Troubleshooting

Servicing should be performed only by an authorized Hydromatic service center.

Warning: Always disconnect the pump from power source before handling or making any adjustments. Always wear rubber boots when there is water on the floor and you must unplug the pump or make any adjustments.

Note: Automatic thermal overload protects the sealed-in-oil motor. Running dry may overheat the motor and activate the overload protector until the unit cools.

Pump does not run or just hums.

1. Line circuit breaker may be off, or fuse may be blown or loose.
2. Water level in sump may be too low to activate automatic switch. See installation for proper on/off levels.
3. Pump and/or switch cord plug may not be making contact in receptacle.
4. If pump is using the series (piggyback) cord plug, the two plugs may not be plugged together tightly.
5. Float may be stuck. Be sure float operates freely in basin.
6. If the unit is being operated by the optional float control switch, unplug the pump from the piggyback receptacle and plug the pump directly into the power source. If the pump starts each time it is plugged directly into the receptacle and does not start each time when plugged into the piggyback switch with the float raised up to a start position, replace the complete piggyback switch assembly and retest with new assembly.
7. If all symptoms check OK, motor winding may be open; take to authorized service center for check.

Pump runs but does not deliver water.

1. Check valve may be installed backward. Arrow on valve points in direction of flow.
2. Discharge shutoff valve, if used, may be closed.
3. Pump may be air locked. Start and stop several times by plugging and unplugging cord.

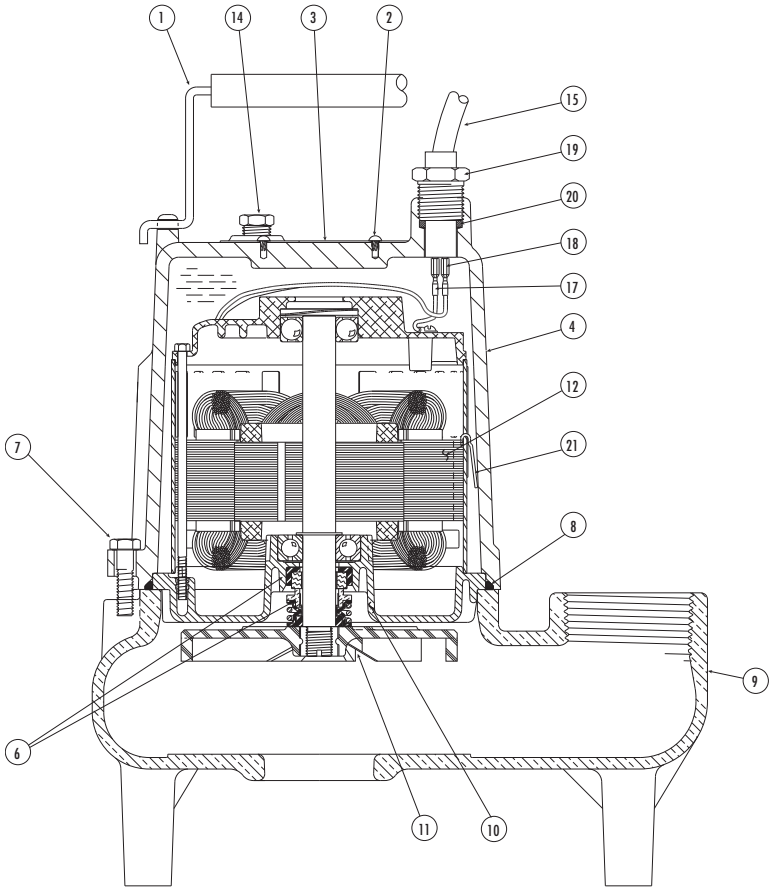

Pump Troubleshooting

Check vent hole in pump case for plugging.

Hydromatic pumps have a small air vent hole in the impeller cavity to let out trapped air. If this hole becomes plugged, pump may air lock. To break the air lock, use a small screwdriver to clear hole in the impeller cavity.

As a secondary precaution in installations of this type — 1/16" hole should be drilled in the discharge pipe below the check valve. The check valve should be 12 to 18 inches above pump discharge. Do not put check valve directly into pump discharge opening.

NOTE: In sumps where the pump is operating daily, air locking rarely occurs.

4. Pump head may be too high. Pump cannot deliver water over 24' vertical lift. Horizontal distance does not affect pumping, except for friction loss through the pipe.
5. Inlet in pump base may be clogged. Remove pump and clean out openings.
6. Impeller or volute openings may be plugged or partially plugged. Remove pump and clean out.

Pump runs and pumps out sump but does not stop.

1. Float is stuck in up position. Be sure float is not hung up and operates freely in basin.
2. Switch contacts may be stuck; replace switch.

Pump runs but delivers only small amount of water.

1. Pump may be air locked. Start and stop several times by plugging and unplugging cord. Check vent hole in pump case for plugging.
2. Pump head may be too high. Pump cannot deliver water over 24' vertical lift. Horizontal distance does not affect pumping, except loss due to friction through discharge pipe.
3. Inlet in pump base may be clogged. Remove pump and clean out openings.
4. Impeller or volute openings may be plugged or partially plugged. Remove pump and clean out.
5. Pump impeller may be partially clogged causing motor to run slow, resulting in motor overload. Clear impeller.

Fuse blows or circuit breaker trips when pump starts.

1. Inlet in pump base may be clogged. Remove pump and clean out openings.
2. Impeller or volute openings may be plugged or partially plugged. Remove pump and clean out.
3. Pump impeller may be partially clogged causing motor to run slow, resulting in motor overload. Clear impeller.
4. Fuse size or circuit breaker is too small.
5. Defective motor stator: return to authorized Hydromatic service center for verification.

Motor runs for short time then stops. Then after short period starts again. Indicates tripping overload caused by symptom shown.

1. Inlet in pump base may be clogged. Remove pump and clean out openings.
2. Impeller or volute openings may be plugged or partially plugged. Remove pump and clean out.
3. Pump impeller may be partially clogged causing motor to run slow, resulting in motor overload. Clear impeller.
4. Defective motor stator: return to authorized Hydromatic service center.

SKV50 PERFORMANCE CURVE

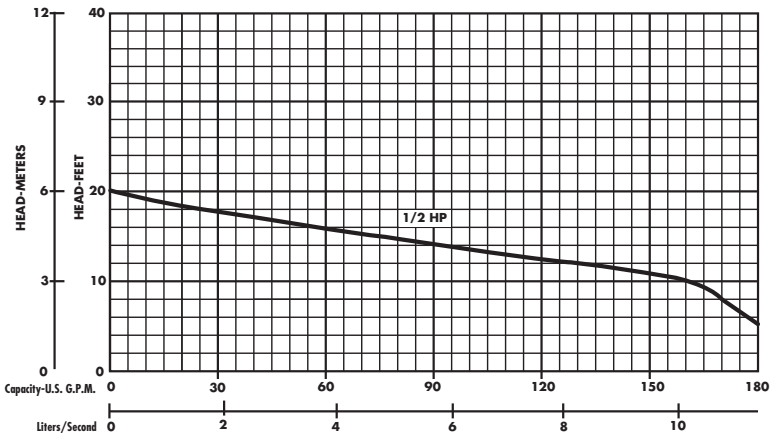

SKV50
Parts List

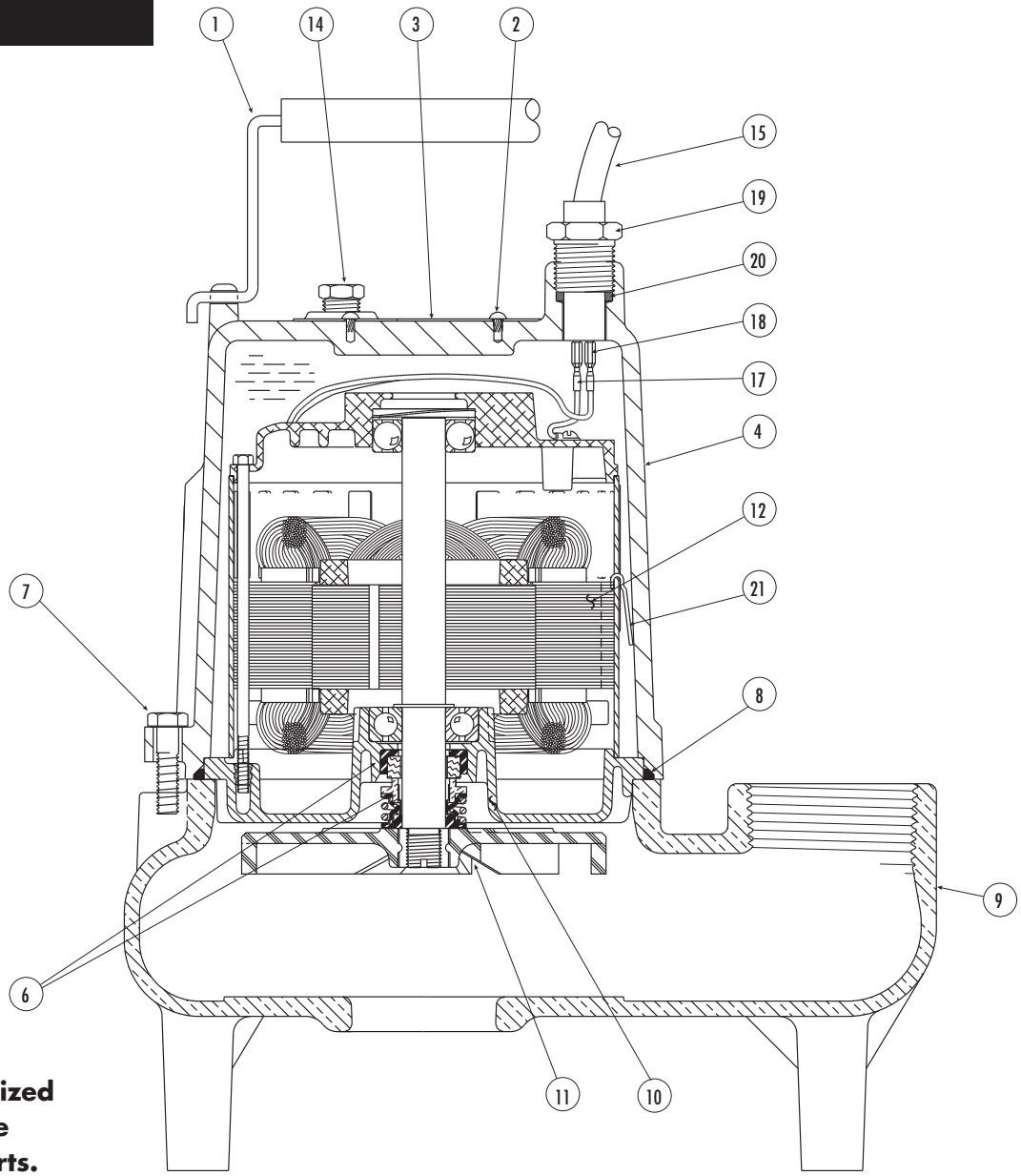

Refer to an authorized Hydromatic service center to order parts.

Ref. No.	Part No.	Description	Qty.	Ref. No.	Part No.	Description	Qty.
1	60-000-5	Handle	1	15	14623-020-1	Cord Assy. *16-3, 20', 115V	1
2	4580-001-1	Drive Screw	2	15	14623-210-1	Cord Assy. *16-3, 10', 230V	1
3	13425-069-1	Nameplate	1	15	14623-220-1	Cord Assy. *16-3, 20', 230V	1
4	56-036-2	Motor Housing	1	17	6000-053-1	Wire with Terminal	1
6	14525A010	Seal Assy.	1	18	6000-061-1	Wire with Terminals	2
7	19100A012	Capscrew	4	19	75-005-1	Cord Nut	1
8	77-003-1	Seal Ring	1	20	139-014-1	Cord Grommet	1
9	6818-100-2	Volute	1	21	13666-000-1	Ground Strap	1
10	6846-003-1	Seal Plate	1				
11	8498-006-1	Impeller	1			**FOR AUTOMATIC OPERATION**	
12	13559-000-1	Stator & Shell 115V Motor	1	Not	13967-011-5	Piggyback Switch, 115V-10' Cord	1
12	13593-000-1	Stator & Shell 230V Motor	1	Shown	13967-021-5	Piggyback Switch, 115V-20' Cord	1
14	14981-001-1	Pipe Plug	1		14974-008-5	D-Switch, 115V-10' Cord	1
15	14623-010-1	Cord Assy. *16-3, 10', 115V	1				

LIMITED WARRANTY

HYDROMATIC warrants to the original consumer purchaser (“Purchaser” or “You”) of HYDROMATIC Sump Pumps, Effluent Pumps, Sewage Pumps (other than 2-1/2"), and Package Systems, that they will be free from defects in material and workmanship for the Warranty Period of 36 months from date of manufacture.

Our warranty will not apply to any product that, in our sole judgement, has been subject to negligence, misapplication, improper installation, or improper maintenance. Without limiting the foregoing, operating a three phase motor with single phase power through a phase converter will void the warranty. Note also that three phase motors must be protected by three-leg, ambient compensated, extra-quick trip overload relays of the recommended size or the warranty is void.

Your only remedy, and HYDROMATIC’s only duty, is that HYDROMATIC repair or replace defective products (at HYDROMATIC’s choice). You must pay all labor and shipping charges associated with this warranty and must request warranty service through the installing dealer as soon as a problem is discovered. No request for service will be accepted if received after the Warranty Period has expired. This warranty is not transferable.

EXCEPTIONS: Hydromatic Special Application Pumps, Battery Back-Up Sump Pumps, Filtered Effluent Pumps, Grinder Pumps, and 2-1/2" Sewage Pumps are warranted for a period of 12 months from date of purchase or 18 months from date of manufacture, whichever comes first.

HYDROMATIC SHALL NOT BE LIABLE FOR ANY CONSEQUENTIAL, INCIDENTAL, OR CONTINGENT DAMAGES WHATSOEVER.

THE FOREGOING WARRANTIES ARE EXCLUSIVE AND IN LIEU OF ALL OTHER EXPRESS AND IMPLIED WARRANTIES, INCLUDING BUT NOT LIMITED TO THE IMPLIED WARRANTIES OF MERCHANTABILITY AND FITNESS FOR A PARTICULAR PURPOSE. THE FOREGOING WARRANTIES SHALL NOT EXTEND BEYOND THE DURATION EXPRESSLY PROVIDED HEREIN.

Some states do not allow the exclusion or limitation of incidental or consequential damages or limitations on the duration of an implied warranty, so the above limitations or exclusions may not apply to You. This warranty gives You specific legal rights and You may also have other rights which vary from state to state.

This warranty supersedes and replaces all previous warranty publications.

HYDROMATIC
740 East 9th Street, Ashland, OH 44805
Phone: 888-957-8677 • Fax: 888-840-7867 • Web Site: http://www.hydromatic.com

HYDROMATIC®
Pentair Water

SSPMA Certified PUMP

– Your Authorized Local Distributor –

USA
740 East 9th Street, Ashland, Ohio 44805
Tel: 888-957-8677 Fax: 888-840-7867

www.hydromatic.com

CANADA
269 Trillium Drive, Kitchener, Ontario, Canada N2G 4W5
Tel: 519-896-2163 Fax: 519-896-6337

© 2007 Hydromatic® Ashland, Ohio. All Rights Reserved.

Part # 5625-364-1

Item # W-03-364 Rev. 9/22/09