SERVICE PART NO.	COMPONENT PART NO'S	NO. REQ'D
11458 BODY	11454 413	1 2
10914 COVER	10913 6333-G	1 1
10927 SEAL & SEAT	10523 10926	1 1

MAJOR REPAIR KIT # 12300 (E)
MINOR REPAIR KIT # 10656 (F)

D-60

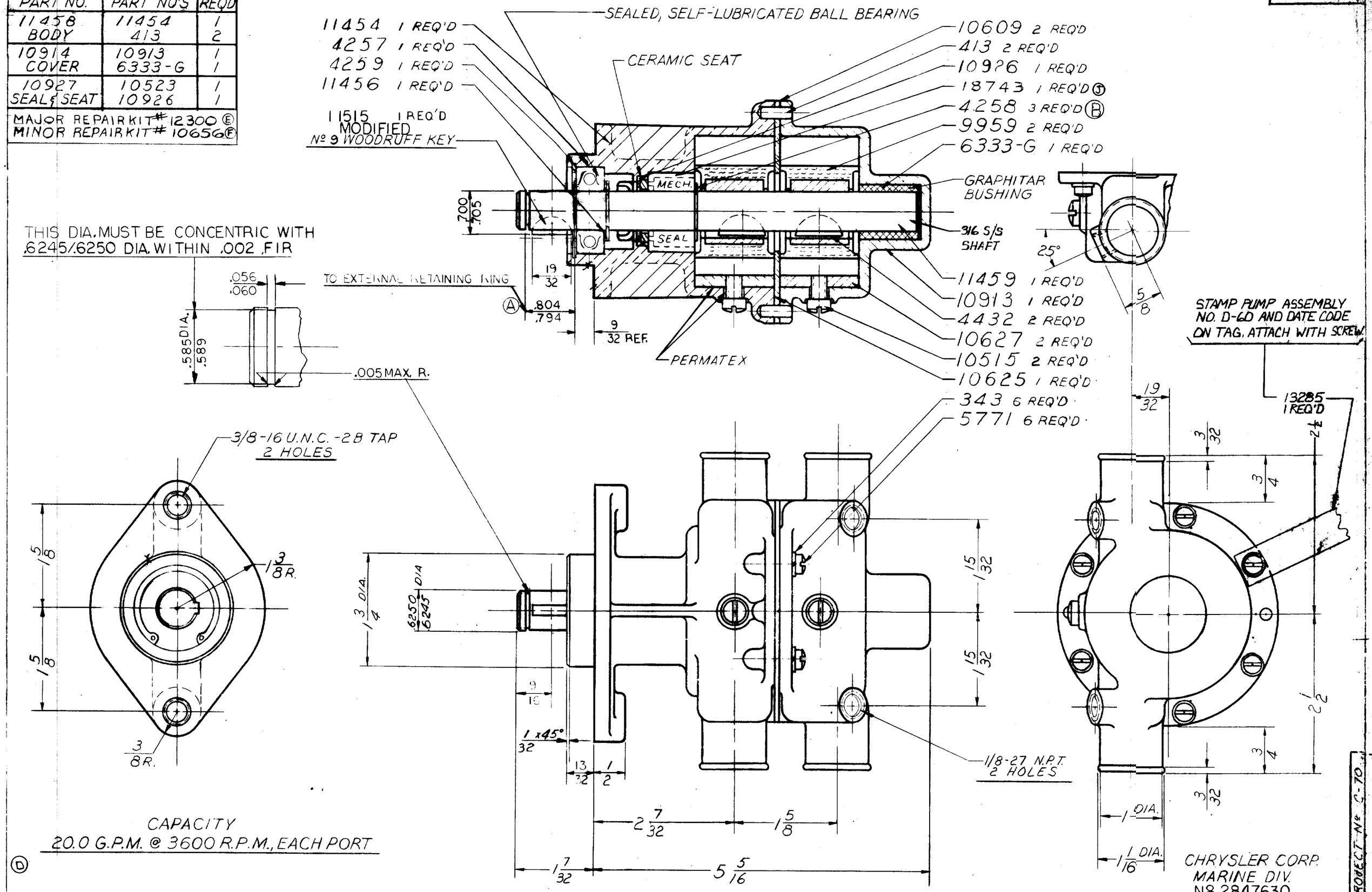

CAPACITY
20.0 G.P.M. @ 3600 R.P.M., EACH PORT

(D)

CHRYSLER CORP.
MARINE DIV.
Nº 2847630

CURVE NO. 72010 & 72011

(G) FOR SERVICE:
PACKAGE THIS PUMP ASSEMBLY IN A
Y BOX 1 REQ'D
2 JIFFY BAG 1 REQ'D
12209 LABEL 1 REQ'D
(H) # 13472 SURVICE BULLETIN 1 REQ'D

FLOW CURVE REF. G-30

REV	DESCRIPTION	REQ.	DATE
I	ADDED TAG NO. 13285		
H	NO. 13472 SURVICE BULLETIN ADDED	RI	2-1-82
G	PACKAGING NOTE ADDED	RM	7-31-78
F	10656 KIT REVISED	RM	10-20-76
E	12300 KIT ADDED	RM	10-20-76
D	NOTES ADDED	RM	7/26/73
C	MAJOR SERVICE KIT ADDED	RM	4-24-72
B	WAS 2 REQ'D	T.J.	10-27-69
A	WAS 7/8 TO INNER RACE	PJL	3/31/69

DO NOT SCALE DRAWING
PLUS OR MINUS .005 ALLOWED ON FRACTIONAL DIMENSIONS. ALL HOLES AND SHARP CORNERS TO BE BURRED .005 TO .010. CORNERS AND FILLETS TO BE 1/16R. UNLESS OTHERWISE SPECIFIED

SHERWOOD
A DIVISION OF HYPRO CORPORATION
6931 E. JEFFERSON AVE. • DETROIT, MICHIGAN 48207

IMPELLER PUMP ASS'Y

SEE DETAILS

SCALE FULL
DRAWN B.P.
CHECKED A.V.B.
APPROVED
REQ'D
DATE 6-18-68
DATE 6-28-68
REF. # R-10985-G

PART NO. D-60

PROJECT Nº C-70

J SEAL WAS 10523 KB 8-16-89